SIGMA
PRECISION CRAFTED

Widespread Lavatory Set Installation Instructions

NOTICE: These instructions do not represent step-by-step directions. They are a product supplement only to be used by a qualified/licensed plumber. We recommend all plumbing fixtures be installed by a professional. PLEASE INSPECT PRODUCT PRIOR TO INSTALLING. Carefully review all pre-assembled parts. It will be necessary for the various parts to be reassembled exactly as shown.

Spout Installation:

1. Allow 1-1/4" hole in the deck. Remove the tee, mounting nut, and horseshoe washer (for 3-way tees)
2. Drop the spout through the top of the deck and secure from underneath the deck with the mounting nut. Replace the tee assembly. FIG A

Note: Please review your tee assembly carefully. Spout will not seal if improperly reassembled. The 4-way Tee Assembly is a compression-style fitting; verify that the Bottom Holding Nut is snugly tightened to complete the seal after installation is complete.

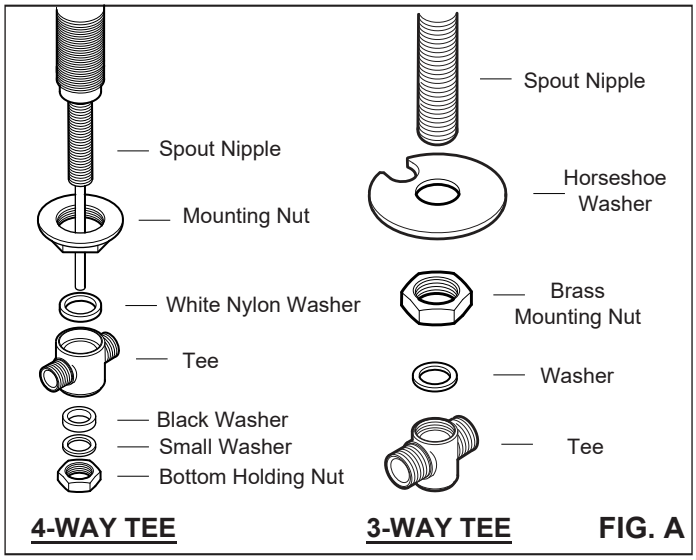

FIG. A

Supply Valve Installation:

3. Lavatory hot and cold supply valves require 1-1/4" holes in the deck. Handles are shipped pre-assembled to valves; remove the handle pieces and the top locking nut to begin. *Some escutcheons may be used as the top locking nut.

4. Install hot and cold valves from underneath the deck using locking nuts and adjust the valve height so that Measurement A is as shown in the chart found on page 2. Measurement A differs by handle selection. Valve bodies have stickers to distinguish hot (red) from cold (blue). FIG B

5. Test the chosen height by temporarily placing the handle pieces over the valve. After you have checked the fit, remove handle pieces and tighten the locking nuts with a wrench.

6. Remount handle pieces. Handle should open and close in a 1/4 turn.

7. Connect the stainless steel braided hoses from the tee to the outlets of the supply valves. **Carefully hand-tighten hose, as the use of grippers and excessive force will break the seal. After flushing all lines, install the connections from the angle stops to the supply valve inlets (plumber supplies connections).

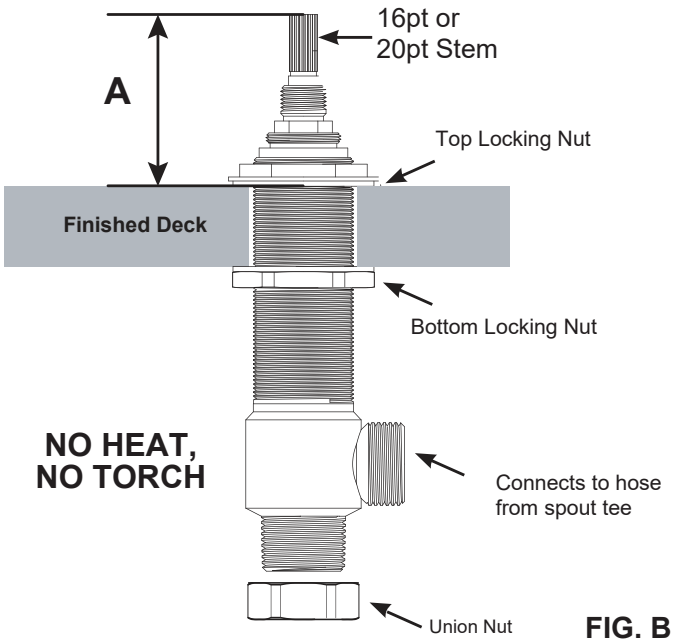

FIG. B

CAUTIONS!

Apply teflon tape to threaded areas if applicable. Be sure to check system for leaks, testing valves and lines before closing the deck. Always flush lines of debris. It may be necessary to flush more than once.
Do not force handle to close valve- if debris should clog the cartridge, carefully flush (but do not disassemble) cartridge.
Use of any lead-based or acidic curing sealant will void the finish warranty. Use only sealants which are neutral curing and not reactive with metal and brass finishes.

American Faucet & Coatings Corporation

Handle Chart

		M. A
Group 1 (20pt Only):	Carina (28), Carina X (30), Ceres II (50), Nova II (48), Polaris II (49), Prana (92), Stella (07), Stella X (08), Capella (97), Capella X (98), Tribeca (29), Tribeca X (39)	**1-1/2”**
Group 2 (16pt/20pt):	**16pt:** Aria (01), Ascot (77), Seville (12), Sussex (78), Waldorf (76) **20pt:** Lisse (83), Regent (53), Regent X (54), Tremont (61)	**1-3/4”**
Group 3 (16pt Only):	Palermo (44)	**2”**
Group 4 (16pt Only):	Bordeaux (64), Devon (45), Georgian (41), Huntington (27), Jefferson Elite (02), Loire (56), Luxembourg (65), Madison Elite (40), Monte Carlo (59), Orleans (57), St. Michel (55), Toronto (20), Venezia (25)	**2-1/4”**
Group 5 (16pt Only):	Salem (09), Windham (10)	**2-3/8”**
Group 6 (16pt Only):	Charlotte (04), Charlotte Elite (05), Lexington (03), Lira (82), Mallorca (75), Maya (80), Moderne (93), Moderne X (94), New Hampton (43), Portsmouth (06), Valencia (74)	**2-1/2”**
Group 7 (16pt Only):	Harlow (60)	**2-5/8”**
Group 8 (16pt Only):	Alexandria (14), Chicago (85), Hampshire (13), Houston (81), Montreal (17)	**2-3/4”**
Group 9 (16pt Only):	Siena (79)	**3”**

Pop-up Drain Installation FIG C:

1. Remove the flange and stopper and apply neutral sealant to the bottom of the flange. Install drain body through the bottom of the sink hole and attach to the flange. Verify that the hole for the ball rod is facing towards the back of the sink and tighten the mounting nut against the sink
2. Remove the threaded tailpiece, apply teflon tape to seal the threads, and reattach to the drain body.
3. Install the stopper into the flange and swivel so that the hook at the bottom can catch the ball rod. Verify that the ball rod ball is surrounded by the cone washers and that the ball rod nut is facing towards the back of the sink, then install the ball rod into its hole in the drain body and through the hook for the stopper. Tighten the nut so that the rod is secure, but can move freely up and down
4. Attach the pop-up rod to the linkage adjustable strap and secure with the screw. Use the clip to attach the ball rod to the linkage adjustable strap. Check the action of the stopper and make any necessary adjustments.
5. The waste apparatus can now be connected to the bottom of the tailpiece

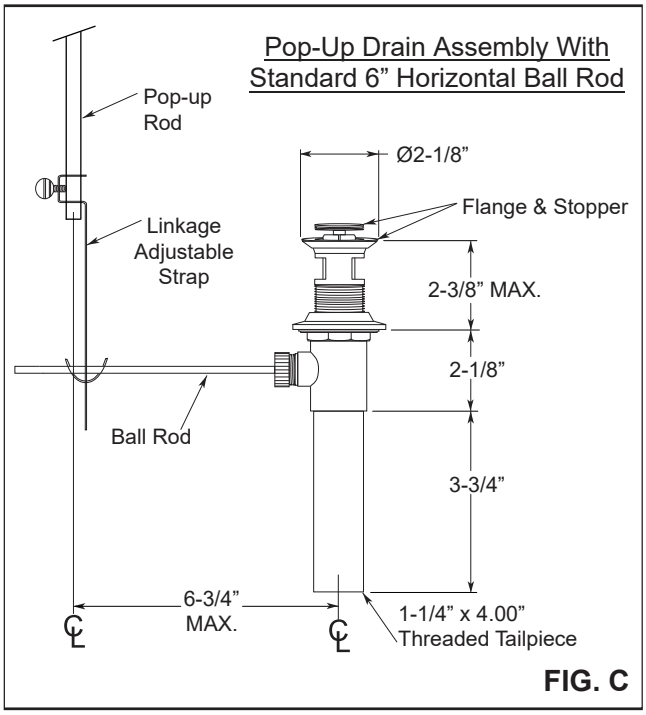

FIG. C

Soft-touch Drain Installation FIG D:

1. Remove the mounting nut/washer/gasket, apply a neutral sealant to the bottom of the flange, and install the drain body through the top of the sink.
2. Secure body against the sink with the washers and mounting nut. Remove threaded tailpiece, apply teflon tape to seal the threads, and reattach to the drain body.
3. The waste apparatus can now be connected to the bottom of the tailpiece

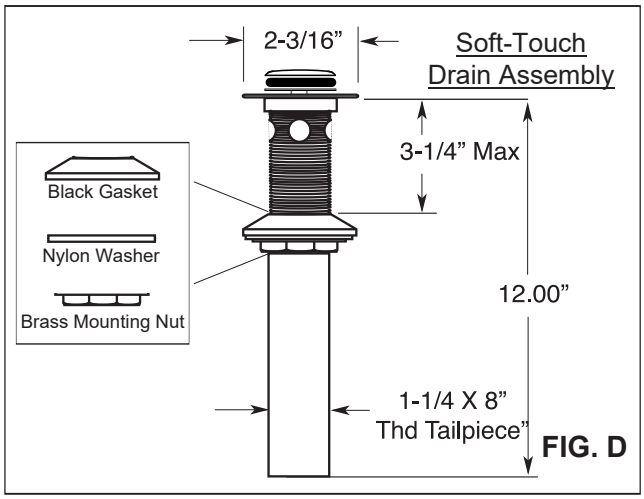

FIG. D

AMERICAN

AMERICAN FAUCET & COATINGS CORPORATION
LIMITED PRODUCT WARRANTY

AMERICAN

Product/Finish Warranty: American Faucet & Coatings Corporation warrants that products are free from defects in materials and workmanship for five (5) years from date of invoice. In addition, our Finish Warranty provides limited LIFETIME coverage for Chrome & PVD finishes, five (5) years for Omega powder coated finishes. Living finishes are war-ranted for workmanship only. If any material proves to be defective after inspection by our company, it will be repaired or replaced at our discretion at no charge. However, no claims for labor, shipping costs, or consequential damages will be accepted.

What we will do: We will restore any product whose finish proves to be defective back to its original finish at no charge during the appropriate warranty period stated above. Proof of purchase must be provided. After the warranty period, American Faucet and Coatings Corporation will refinish any of its faucets at the prevailing appropriate charge.

What you must do: The faucets must be properly installed according to our instructions and specifications & are for residential use only. The faucets cannot be altered in any way. You must maintain and clean the faucets in accordance with the instructions provided with the product. You must use the faucet(s) for residential use only.

How to obtain service: Contact our customer service by calling 800.960.BATH or send an email to customerservice@sigmafaucet.com. Please have you model number and proof of purchase available so we can better assist you.

We will then respond and take appropriate action. Do not send us any part(s) of your faucet(s) or its various connecting hoses unless we have contacted you and have sent you an approved RGA form. All transportation charges for returned goods must be paid by the customer.

What is not covered: This warranty does not cover the crystal/glass, or porcelain products of any faucet or the drain assembly or aerator on other than the Chrome or PVD finishes. This warranty also does not cover damage caused by accident, alterations, misuse, abuse, normal wear and tear, lime deposits, direct exposure to salty air or corrosive materials, or the color change that takes place with the passage of time, or use in any manner contrary to American Faucet and Coatings Corporation's printed instructions. In the case of in-the-wall installations American Faucet and Coatings Corp. will assume no liability if there is no access. **In no event will we be liable for labor of any kind, incidental or consequential damages.** This warranty is extended in lieu of all other expressed or implied warranties, whether oral or written. **Many installation compounds are harmful to brass and metal finishes. The use of any lead-based or acidic curing adhesive, silicone, mastic, or plumber's putty on or near our finished products will void the finish warranty. Use only sealants which are neutral curing and are not reactive with metal and brass finishes.** American Faucet & Coatings Corporation reserves the right to change, modify or alter its products as deemed necessary. This warranty super-sedes any other American Faucet & Coatings Corporation warranties, whether oral or written.

Unless otherwise contrary to state law governing the purchase, American Faucet and Coatings Corporation's liability will not exceed the wholesale price for the American Faucet and Coatings Corporation product considered defective. This warranty gives you specific legal rights, and you may also have other rights which vary from state to state. Some states do not allow exclusion of incidental or consequential damages, so the above limitation may not apply to you.

LIFETIME WARRANTY ON 1/4 TURN CERAMIC DISC CARTRIDGE

Should the ceramic disc cartridge in your faucet ever fail, American Faucet & Coatings Corporation will replace the failed part free of charge to the original purchaser of the product. Shipping and handling charges will apply. Labor not included. When ordering replacements, denote for widespread or centerset lavatory, Roman Tub, or other. Include age of faucet. (This does not include thermostatic, pressure balance, or diverter cartridges.)

CONSUMER WARNING
CALIFORNIA PROPOSTION 65 WARNING

Among other chemicals known to cause harm, this faucet contains lead, a chemical known to the State of California to cause birth defects or other reproductive harm.

All faucets and products made of leaded brass alloys, even those that comply with U.S. Environmental Protection Agency regulations, contribute small amounts of lead to water that is allowed to stand in contact with the brass. This faucet complies with all E.P.A. regulations regarding the amount of lead used in plumbing brass and solder. The amount of lead contributed by any faucet is highest when the faucet is new. The following steps will reduce potential for exposure to lead from faucets and other parts of the plumbing system:

- Always run the water for a few seconds prior to use for drinking or cooking.
- Use only cold water for drinking or cooking.
- If you wish to flush the entire plumbing system of water that has been standing in the pipes or other fittings, run the cold water until the temperature of the water drops, indicating water coming from the outside main.
- If you are concerned about lead in your water, have your water tested.