CR, CRI, CRN

Installation and operating instructions

be
think
innovate

GRUNDFOS

CR, CRI, CRN

English (GB)
Installation and operating instructions 4

Български (BG)
Упътване за монтаж и експлоатация 27

9Čeština (CZ)
Montážní a provozní návod 50

Deutsch (DE)
Montage- und Betriebsanleitung 73

Dansk (DK)
Monterings- og driftsinstruktion 96

Eesti (EE)
Paigaldus- ja kasutusjuhend 119

Español (ES)
Instrucciones de instalación y funcionamiento 142

Suomi (FI)
Asennus- ja käyttöohjeet 165

Français (FR)
Notice d'installation et de fonctionnement 188

Ελληνικά (GR)
Οδηγίες εγκατάστασης και λειτουργίας 211

Hrvatski (HR)
Montažne i pogonske upute 235

Magyar (HU)
Telepítési és üzemeltetési utasítás 258

Italiano (IT)
Istruzioni di installazione e funzionamento 282

Lietuviškai (LT)
Įrengimo ir naudojimo instrukcija 305

Latviešu (LV)
Uzstādīšanas un ekspluatācijas instrukcija 328

Nederlands (NL)
Installatie- en bedieningsinstructies 351

Polski (PL)
Instrukcja montażu i eksploatacji 375

Português (PT)
Instruções de instalação e funcionamento 398

CR, CRI, CRN

Română (RO)
Instrucţiuni de instalare şi utilizare 422

Srpski (RS)
Uputstvo za instalaciju i rad 445

Svenska (SE)
Monterings- och driftsinstruktion 468

Slovensko (SI)
Navodila za montažo in obratovanje 491

Slovenčina (SK)
Návod na montáž a prevádzku 514

Türkçe (TR)
Montaj ve kullanım kılavuzu 537

Українська (UA)
Інструкції з монтажу та експлуатації 560

中文 (CN)
安装和使用说明书 583

Bahasa Indonesia (ID)
Petunjuk pengoperasian dan pemasangan 605

Македонски (MK)
Упатства за монтирање и ракување 628

Norsk (NO)
Installasjons- og driftsinstruksjoner 651

Íslenska(IS)
Uppsetningar- og notkunarleiðbeiningar 674

(AR) العربيـــة
تعليمـــات التركيـــب و التشـــغيل 719

Appendix 720

English (GB) Installation and operating instructions

Original installation and operating instructions

These installation and operating instructions describe Grundfos CR, CRI and CRN pumps, 0.37 - 75 kW.

Sections 1-4 give the information necessary to be able to unpack, install and start up the product in a safe way.

Sections 5-10 give important information about the product, as well as information on service, fault finding and disposal of the product.

CONTENTS

		Page
1.	**General information**	**4**
1.1	Hazard statements	4
1.2	Notes	4
2.	**Receiving the product**	**5**
2.1	Transporting the product	5
2.2	Unpacking the product	5
2.3	Inspecting the product	5
2.4	Lifting the product	5
3.	**Installing the product**	**6**
3.1	Mechanical installation	6
3.2	Electrical connection	12
4.	**Starting up the product**	**15**
4.1	Shaft seal run-in	15
4.2	Frequency of starts and stops	16
4.3	Operating the product	16
5.	**Product introduction**	**17**
5.1	Identification	17
5.2	Intended use of the product	18
6.	**Servicing the product**	**18**
6.1	Contaminated products	19
6.2	Service documentation	19
6.3	Maintaining the product	19
7.	**Taking the product out of operation**	**21**
7.1	Frost protection	21
7.2	Taking the product permanently out of operation	21
8.	**Fault finding the product**	**22**
9.	**Technical data**	**24**
9.1	Operating conditions	24
9.2	Electrical data	26
9.3	Dimensions and weights	26
10.	**Disposing of the product**	**26**

Read this document before installing the product. Installation and operation must comply with local regulations and accepted codes of good practice.

1. General information

1.1 Hazard statements

The symbols and hazard statements below may appear in Grundfos installation and operating instructions, safety instructions and service instructions.

DANGER

Indicates a hazardous situation which, if not avoided, will result in death or serious personal injury.

WARNING

Indicates a hazardous situation which, if not avoided, could result in death or serious personal injury.

CAUTION

Indicates a hazardous situation which, if not avoided, could result in minor or moderate personal injury.

The hazard statements are structured in the following way:

SIGNAL WORD

Description of hazard

Consequence of ignoring the warning.

- Action to avoid the hazard.

1.2 Notes

The symbols and notes below may appear in Grundfos installation and operating instructions, safety instructions and service instructions.

Observe these instructions for explosion-proof products.

A blue or grey circle with a white graphical symbol indicates that an action must be taken.

A red or grey circle with a diagonal bar, possibly with a black graphical symbol, indicates that an action must not be taken or must be stopped.

If these instructions are not observed, it may result in malfunction or damage to the equipment.

Tips and advice that make the work easier.

2. Receiving the product

2.1 Transporting the product

WARNING

Falling objects

Death or serious personal injury
- Keep the product in a stable and fixed position during transportation.
- Wear personal protective equipment.

2.2 Unpacking the product

WARNING

Falling objects

Death or serious personal injury
- Keep the product in a stable position during unpacking.
- Wear personal protective equipment.

2.3 Inspecting the product

Before you install the product, do the following:

1. Check that the product is as ordered.
2. Check that no visible parts have been damaged.

If parts are damaged or missing, contact your local Grundfos sales company.

2.4 Lifting the product

WARNING

Falling objects

Death or serious personal injury
- Follow the lifting instructions.
- Use lifting equipment which is approved for the weight of the product.
- Persons must keep a safe distance to the product during lifting operations.
- Wear personal protective equipment.

Note that typically the centre of gravity of the pump is close to the motor.

When lifting the entire product with motor, follow these instructions:

- Pumps with 0.37 - 5.5 kW motors, all types:
  Lift the pump by straps or similar lifting equipment in the motor flange.
- Pumps with 7.5 - 22 kW motors, Grundfos MG and MGE:
  Lift the pump by the motor eyebolts.
- Pumps with 7.5 - 45 kW motors, other types than Grundfos MG and MGE:
  Lift the pump by the lifting brackets on the motor flange.

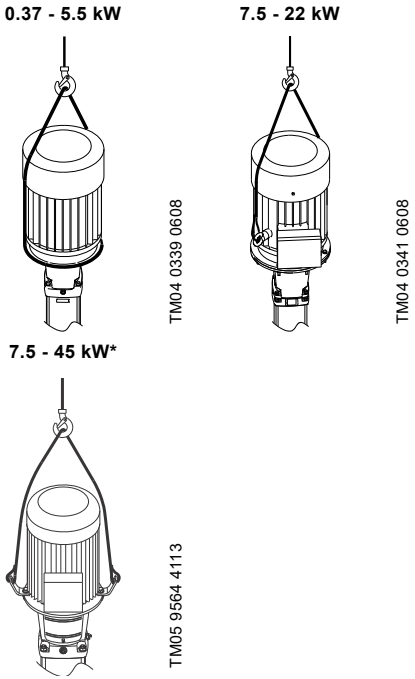

Fig. 1 Lifting points

* In case of pumps with other motors than Grundfos MG and MGE.

3. Installing the product

3.1 Mechanical installation

WARNING

Contamination when pumping drinking water

Death or serious personal injury

- Before the pump is used for supplying drinking water, flush the pump thoroughly with clean water.
- Do not use the pump for drinking water if the internal parts have been in contact with particles or substances not suitable for water intended for human consumption.

The pump must be installed according to national water regulations and standards.

3.1.1 Lifting the product

WARNING

Falling objects

Death or serious personal injury

- Follow the lifting instructions.
- Use lifting equipment which is approved for the weight of the product.
- Persons must keep a safe distance to the product during lifting operations.
- Wear personal protective equipment.

For lifting instructions, see section *2.4 Lifting the product*.

3.1.2 Drive-end motor bearing

Make sure to use the correct type of drive-end (DE) motor bearing for the bare-shaft pump. Please check the specific pump range and pump version stated on the nameplate and select the corresponding DE bearing.

Pump version[1)]		DE bearing CR 1-64 pump range		DE bearing CR 95-255 pump range	
		Deep-groove ball bearing (62/63xx)	Angular contact bearing (73xx)	Deep-groove ball bearing (62/63xx)	Angular contact bearing (73xx)
A	Standard pump	0.37 - 3 kW	4-45 kW	75-200 kW	5.5 - 55 kW
T	Pump with thrust handling device (THD)[2)]	-	-	5.5 - 55 kW	Not allowed
Z	Pump with bearing flange[2)]	0.37 - 45 kW	Not allowed	5.5 - 200 kW	Not allowed

1) Refer to the codes for pump version in section *5.1.2 Type key for CR, CRN 32, 45 and 64*.

2) Factory product variants (FPV).

3.1.3 Installation guidelines

The pump must be secured to a horizontal, plane and solid foundation with bolts through the holes in the base plate. When installing the pump, be aware of the information below in order to avoid damaging the pump.

Illustration		Information
1	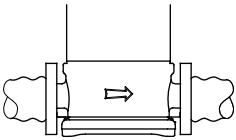 TM02 0013 3800	Arrows on the pump base show the direction of flow of liquid through the pump.
2	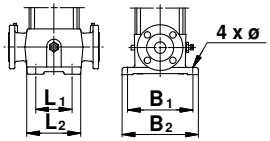 TM00 2256 3393	This information is stated in fig. 3 in the appendix: • port-to-port lengths • dimensions of the base plate • pipe connections • diameter and position of anchor bolts.
3	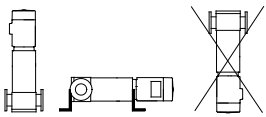 TM01 1241 4097	You can install the pump vertically or horizontally. However, the motor must neither fall below the horizontal plane nor be installed upside down. Make sure that an adequate supply of cool air reaches the motor cooling fan. Motors above 4 kW must be supported.
3a	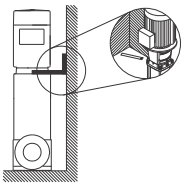 TM05 7705 1013	Additional support. As the centre of gravity of the pump is relatively high, we recommend that pumps installed on ships, in areas with risk of earth quake or in systems which can be moved, are equipped with an additional support bracket. You can fit the bracket from the motor stool to the bulkhead of the ship, a rigid wall in a building or to a rigid part.
4	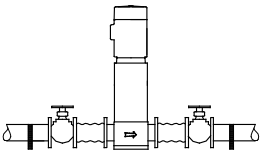 TM02 0116 3800	To minimise possible noise from the pump, we recommend that you fit expansion joints on either side of the pump. Build a foundation and carry out mechanical installation as described in section *3.1.4 Foundation*. Fit the isolating valves on either side of the pump to avoid draining the system if the pump needs to be removed for cleaning, repair or replacement. Always protect the pump against backflow by means of a non-return valve.
5	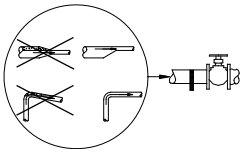 TM02 0114 3800	Install the pipes so that air pockets do not occur, especially on the inlet side of the pump.
6	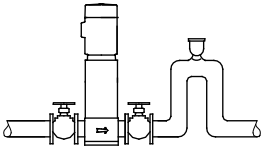 TM02 0115 3800	Fit a vacuum valve close to the pump if the installation has one of these characteristics: • The outlet pipe slopes downwards away from the pump. • There is a risk of siphon effect. • Protection against backflow of unclean liquids is needed.

3.1.4 Foundation

WARNING

Falling objects

Death or serious personal injury

- Keep the product in a stable and fixed position before installing it.
- Make sure that the foundation is suitable for the weight of the product.

We recommend that you install the pump on a concrete foundation which is heavy enough to provide permanent and rigid support for the entire pump. The foundation must be capable of absorbing any vibration, normal strain or shock. The concrete foundation must have an absolutely level and even surface.

Place the pump on the foundation, and fasten it. The base plate must be supported on the whole area.

The following instruction applies when mounting the pump in both vertical and horizontal position. Place the pump on the foundation, and fasten it. See fig. 2.

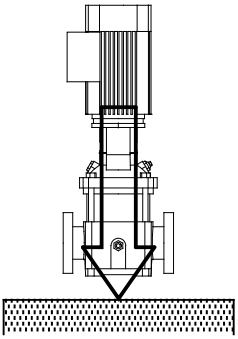

TM04 0342 0608

Fig. 2 Correct installation

The recommended length and width of the foundation are shown in fig. 3. Note that for pumps with motor size below or equal to 30 kW, the length and width of the foundation must be 200 mm larger than the base plate.

For pumps with motor size equal to 37 kW or above, the length and width must always be 1.5 x 1.5 (Lf x Bf) m.

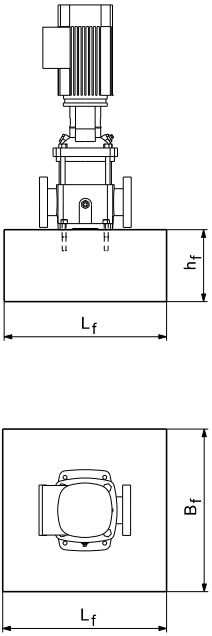

TM04 0343 0608

Fig. 3 Foundation, vertical mounting

The foundation length and width must always be 200 mm larger than the length and width of the pump. See fig. 4.

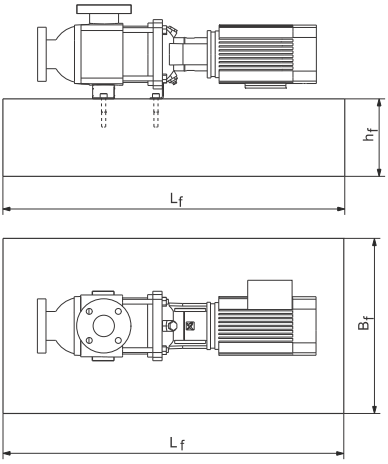

Fig. 4 Foundation, horizontal mounting

The mass of the foundation must be at least 1.5 times the total mass of the pump. The minimum height of the foundation (hf) can then be calculated:

$$hf = \frac{Mpump \times 1.5}{Lf \times Bf \times \delta concrete}$$

The density (δ) of concrete is usually taken as 2200 kg/m^3.

In installations where noise-less operation is particularly important, we recommend that you use a foundation with a mass up to 5 times that of the pump.

The foundation must be provided with anchor bolts for fixing the base plate. See fig. 5.

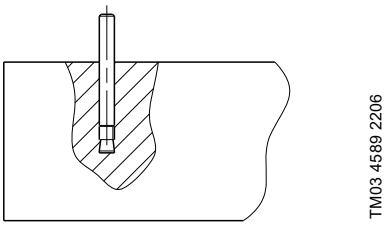

Fig. 5 Bolt in foundation

When the anchor bolts are in position, place the pump on the foundation. Then align the base plate using shims, if necessary, so that it is completely horizontal. See fig. 6.

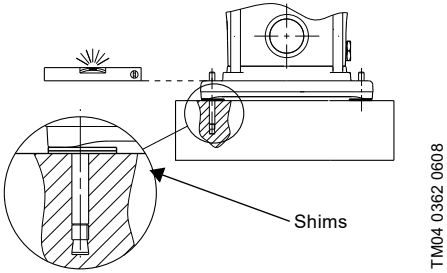

Fig. 6 Alignment with shims

3.1.5 Vibration dampening

Elimination of noise and vibrations is best achieved by means of a concrete foundation, vibration dampers and expansion joints.

If you use vibration dampers, install them under the foundation. For pumps with motor size below or equal to 30 kW, you can use vibration dampers as shown in fig. 7.

For pumps with motor sizes equal to 37 kW or above, use a Sylomer® plate as shown in fig. 8.

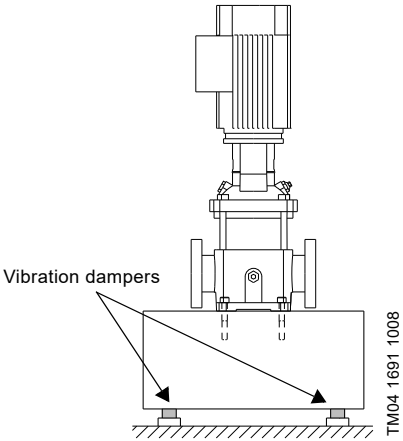

Fig. 7 Pump on vibration dampers

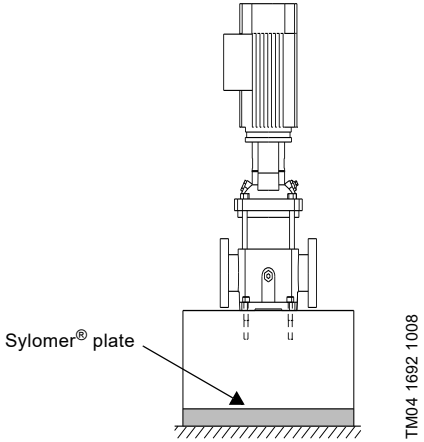

Fig. 8 Pump on Sylomer® plate

3.1.6 Outdoor installation

When the pump is installed outdoors, we recommend that you provide the motor with a rain cover. We also recommend that you open one of the drain holes in the motor flange.

3.1.7 Tightening torques

WARNING

Flange gasket blowout

Death or serious personal injury

- Tighten flange bolts according to the torque values stated in the installation and operating instructions.

The table shows the recommended torques for base plate anchor bolts and flange bolts.

The bolt quality must be minimum class 8.8.

CR, CRI, CRN	Base [Nm]	Flange bolts [Nm]		
		Bolt size	DIN, JIS, ANSI	Oval
1s-5	40	M10	-	50-60
		M12	60	-
10-20	50	M12	60	60-70
32-64	70	M16	100	70-80
		M20	150	-
		M24	200	-

3.1.8 Flange forces and torques

If not all loads reach the maximum permissible value stated in the tables below, one of these values may exceed the normal limit. Contact Grundfos for further information.

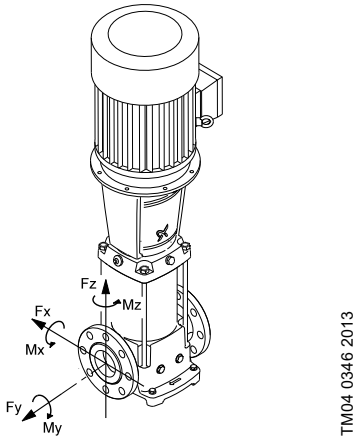

Fig. 9 Flange forces and torques

Y-direction: Inlet or outlet

Z-direction: Direction of chamber stack

X-direction: 90 ° from inlet or outlet

The following tables represent the values that apply according to the material quality.

Force limits

Flange, DN [mm]	Type	CR - Cast iron pump housing			CRI, CRN - Stainless steel pump housing		
		Force, Y-direction [N]	Force, Z-direction [N]	Force, X-direction [N]	Force, Y-direction [N]	Force, Z-direction [N]	Force, X-direction [N]
25/32	1s-5	338	394	319	675	788	638
40	10	413	469	375	825	938	750
50	15 and 20	563	581	506	1125	1163	1013
65	32	694	788	638	1388	1575	1275
80	45	938	769	844	1875	1538	1688
100	64	1256	1013	1125	2513	2025	2250

Torque limits

Flange, DN [mm]	Type	CR - Cast iron pump housing			CRI, CRN - Stainless steel pump housing		
		Torque, Y-direction [Nm]	Torque, Z-direction [Nm]	Torque, X-direction [Nm]	Torque, Y-direction [Nm]	Torque, Z-direction [Nm]	Torque, X-direction [Nm]
25/32	1s-5	300	175	125	600	350	250
40	10	400	275	200	800	550	400
50	15 and 20	450	325	250	900	650	500
65	32	500	350	300	1000	700	600
80	45	325	400	550	650	800	1100
100	64	375	475	625	750	950	1250

3.1.9 Positioning the terminal box

You can turn the terminal box to four positions, in 90 ° steps. Follow this procedure:

1. If necessary, remove the coupling guards. Do not remove the coupling.
2. Remove the bolts securing the motor to the pump.
3. Turn the motor to the required position.
4. Replace and tighten the bolts.
5. Replace the coupling guards.

Carry out the electrical connection as shown in the diagram inside the terminal box cover.

3.2 Electrical connection

Follow the instructions for the motor when carrying out the electrical connections.

The electrical connection must be carried out by an authorised electrician in accordance with local regulations.

WARNING

Electric shock

Death or serious personal injury

- Before starting any work on the product, make sure that the power supply has been switched off and that it cannot be accidentally switched on.
- Connect the pump to an external main switch close to the pump and to a motor-protective circuit breaker or a CUE frequency converter. Make sure you can lock the main switch in OFF position (isolated). Type and requirements as specified in EN 60204-1, 5.3.2.

WARNING

Electric shock

Death or serious personal injury

- The motor must be protected against overload by means of an external motor-protective circuit breaker with IEC trip class 10 or 20.
- Grundfos recommends trip class 20.
- The current setting of the motor-protective circuit breaker must be adjusted to the nominal current stated on the motor nameplate.

WARNING

Electric shock

Death or serious personal injury

- Connect the pump to the same protective-earth (PE) potential as the motor if both motor bearings are of the insulated type, such as ceramic bearings.

Consider whether it is necessary to install an emergency stop switch.

The operating voltage and frequency are marked on the motor nameplate. Make sure that the motor is suitable for the power supply on which it is used and that the motor terminal connection is correct. You will find a wiring diagram in the terminal box.

3.2.1 Maximum absorbed current

Some motors can absorb a maximum current which is larger than the full load current $I_{1/1}$ stated on the nameplate. See the table below.

Motor type according to the nameplate	Upper limit for absorbed current
• Motors marked with both of the below: – full load current $I_{1/1}$ – maximum current I_{max}	I_{max}
• Grundfos MMG-G motors • Grundfos MMG-E motors	1.1 x $I_{1/1}$
• Motors marked only with the below: – full load current $I_{1/1}$	$I_{1/1}$

3.2.2 Cable entry/screwed connection

All motors are supplied without screwed cable entries. The table below shows the numbers and sizes of cable entry holes of the terminal box according to the standard EN 50262.

Motor [kW]	Number and size of cable entries	Description
0.25 - 0.55	2 x M20 x 1.5	The holes have precast threads and are closed with knock-out cable entries.
0.75 - 3.0	2 x M20	The holes are closed with knock-out cable entries.
4.0 - 7.5	4 x M25	The holes are closed with knock-out cable entries.
11-22	2 x M20 4 x M40	The holes are closed with knock-out cable entries.
30-45	2 x M50 x 1.5	Blanking plug.
55-75	2 x M63 x 1.5	Blanking plug.

3.2.3 Three-phase connection

	Mains supply [V]		
	Delta connection		Star connection
50 Hz	220-240	/	380-415
	380-415	/	660-690
60 Hz	220-277	/	380-480[1)]
	380-480	/	660-690

1) 60 Hz motors, 0.37 - 1.1 kW: 220-277/380-440 V.

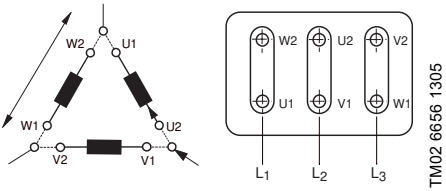

Fig. 10 Delta connection

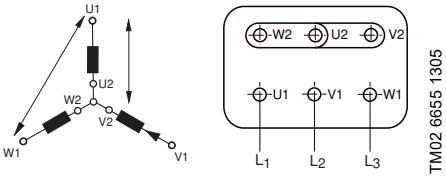

Fig. 11 Star connection

If the motor is provided with PTC sensors or PTO contacts, the connection must be in accordance with the wiring diagram in the terminal box.

Connect three-phase motors to a motor-protective circuit breaker.

3.2.4 Single-phase connection

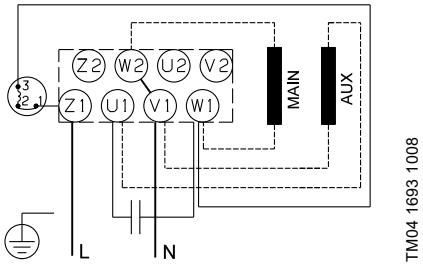

Fig. 12 Connection, 220-230 V, 0.37 - 0.75 kW

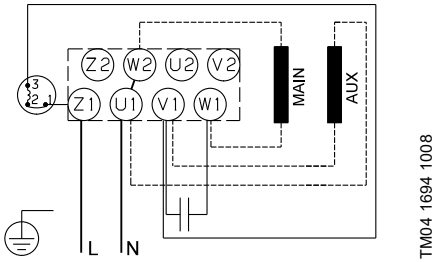

Fig. 13 Connection, 240 V, 0.37 - 0.75 kW

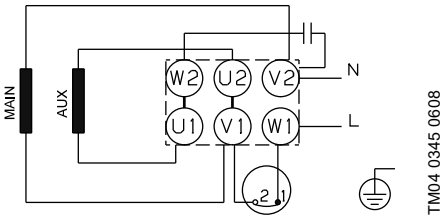

Fig. 14 Connection, 220-230 V, 1.1 - 2.2 kW

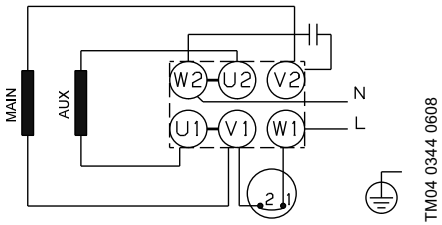

Fig. 15 Connection, 240 V, 1.1 - 2.2 kW

Single-phase Grundfos motors incorporate a thermal switch and require no additional motor protection.

3.2.5 Frequency converter operation

You can use three-phase motors for frequency convertor operation following the conditions below. This section applies to motors defined in IEC 60034.

3.2.6 General conditions

Protect all motors used with frequency converters against voltage peaks and dU/dt according to IEC 60034-17. Grundfos recommends that you use insulated bearings for motors from frame size 225 (45 kW/2-pole, 30 kW/4-pole and 22 kW/6-pole).

3.2.7 Mains voltage dependent conditions

200-240 V

No output filters are required for frequency converter operated motors with mains voltages up to 240 V.

380-500 V

For frequency converter operated motors with power cable length less than 25 m and mains supply up to 460 V, no additional motor protection against voltage peaks is required. For frequency converter operated motors with power cable length of more than 25 m or mains supply higher than 460 V, sine-wave filters are required.

500 V and higher

Always use sine-wave filters for motors marked with 500 V or higher voltages.

Motors with reinforced insulation can be supplied as an option. These motors are according to IEC 60034-25 and therefore there is no need for sine-wave filters. This do not eliminate the requirement for insulated bearings from frame size 225.

Exception

- Protect Grundfos motors types MG 71 and MG 80 (up to 1.1 kW/2-pole and up to 0.75 kW/4-pole) for supply voltages up to and including 440 V without phase insulation against voltage peaks above 650 V between the supply terminals.
- If you use MG 71 and MG 80 without phase insulation for input voltages above 240 V, it requires that you use sine-wave filters at the output of the frequency converter.

MG 71 and MG 80 with phase insulation for use with variable frequency drives are available as standard products.

Motors supplied by Grundfos

You can connect all three-phase MG motors with phase insulation to a frequency converter.

Other motor makes than those supplied by Grundfos

Contact Grundfos or the motor manufacturer.

3.2.8 Phase insulation, MG 71 and 80

MG motors, frame sizes 71 and 80, do not have phase insulation as standard. The motors are not suitable for frequency converter operation as they are not protected against the voltage peaks caused by the frequency converter operation. Only motors with a rated voltage equal to 460 V or above have phase insulation.

Frequency converter operation of MG motors without phase insulation will cause damage to the motor.

We recommend that you protect all other motors against voltage peaks higher than 1200 V by 2000 V/µsec.

You can eliminate the above disturbances, that is both increased acoustic noise and detrimental voltage peaks, by fitting an LC filter between the frequency converter and the motor.

For further information, contact the frequency converter or motor supplier.

4. Starting up the product

WARNING

Corrosive liquids

Death or serious personal injury

- Wear personal protective equipment.

WARNING

Toxic liquids

Death or serious personal injury

- Wear personal protective equipment.

CAUTION

Hot or cold liquid

Minor or moderate personal injury

- Wear personal protective equipment.
- Pay attention to the direction of the vent hole when you fill the pump with liquid and vent it.
- Make sure that no persons are hurt by the escaping liquid.

Fill the pump with liquid and vent it before you start the pump.

Pay attention to the direction of the vent hole during liquid filling and venting. Make sure that the escaping liquid does not cause damage to the motor or other components.

If the pump runs dry, the pump bearings and the shaft seal may be damaged.

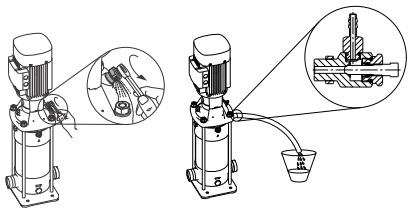

TM05 1160 0611 - TM05 8098 1913

Fig. 16 Vent valve, standard and an optional solution with hose connection

Follow the startup instructions in the appendix.

CR, CRI, CRN 1s to 5

For these pumps, we recommend that you open the bypass valve during startup. See fig. 18 for bypass valve location. The bypass valve connects the inlet and outlet sides of the pump, thus making the filling procedure easier. Close the bypass valve again when the operation is stable.

When pumping liquids containing air, we recommend that you leave the bypass valve open if the operating pressure is lower than 6 bar.

Close the bypass valve if the operating pressure constantly exceeds 6 bar. Otherwise, the material at the opening will be worn because of the high liquid velocity.

4.1 Shaft seal run-in

WARNING

Corrosive liquids

Death or serious personal injury

- Wear personal protective equipment.

WARNING

Toxic liquids

Death or serious personal injury

- Wear personal protective equipment.

CAUTION

Hot or cold liquid

Minor or moderate personal injury

- Wear personal protective equipment.

Make sure that a leakage does not cause damage to the equipment.

The seal faces are lubricated by the pumped liquid, meaning that there may be a certain amount of leakage from the shaft seal.

When you start the pump for the first time, or when you install a new shaft seal, a certain run-in period is required before the leakage is reduced to an acceptable level. The time required for this depends on the operating conditions, that is every time the operating conditions change, a new run-in period will be started.

Under normal conditions, the leaking liquid will evaporate. As a result, no leakage will be detected.

4.2 Frequency of starts and stops

Motor size [kW]	Maximum number of starts per hour
0.37 - 2.2	250
3-4	100
5.5 - 11	50
18.5 - 22	40
30	90
37	50
45	80
55	50
75	50

4.3 Operating the product

For operating the product safely, observe the following hazard statements:

WARNING

Contamination when pumping drinking water

Death or serious personal injury

- Do not use the pump for drinking water if the internal parts have been in contact with particles or substances not suitable for water intended for human consumption.

WARNING

Airborne noise

Death or serious personal injury

- Wear personal protective equipment.

See fig. 4 in the appendix.

WARNING

Too high pressure and leakage

Death or serious personal injury

- Do not run the pump against a closed outlet valve.

CAUTION

Hot or cold surface

Minor or moderate personal injury

- Make sure that no one can accidentally come into contact with hot or cold surfaces.

Hot or cold surfaces

CAUTION

Hot or cold liquid

Minor or moderate personal injury

- Wear personal protective equipment.

Figure 17 shows which pump parts get as hot or cold as the pumped liquid.

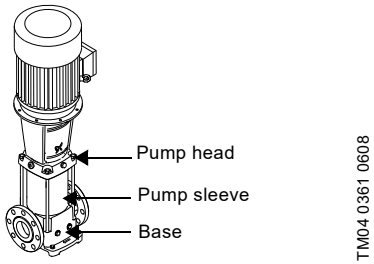

Fig. 17 Hot or cold surfaces on a CR, CRI and CRN pump

For motor bearing maintenance at ambient temperatures above 40 °C, see section *10. Disposing of the product*.

5. Product introduction

5.1 Identification

5.1.1 Type key for CR, CRI, CRN 1s, 1, 3, 5, 10, 15 and 20

Example	CR	3-	10	X-	X-	X-	X-	XXXX
Type range: CR, CRI, CRN								
Rated flow rate in m^3/h								
Number of impellers								
Code for pump version								
Code for pipe connection								
Code for materials								
Code for rubber pump parts								
Code for shaft seal								

5.1.2 Type key for CR, CRN 32, 45 and 64

Example	CR	32-	2	1-	X-	X-	X-	X-	XXXX
Type range: CR, CRN									
Rated flow rate in m^3/h									
Number of stages									
Number of impellers with reduced diameter									
Code for pump version									
Code for pipe connection									
Code for materials									
Code for rubber pump parts									
Code for shaft seal									

5.2 Intended use of the product

Only use the CR, CRI and CRN pumps according to the specification stated in these installation and operating instructions.

5.2.1 Applications

Grundfos multistage in-line centrifugal pumps, types CR, CRI and CRN, are designed for a wide range of applications.

CR, CRI, CRN

CR, CRI and CRN pumps are suitable for liquid transfer, circulation and pressure boosting of cold or hot clean liquids.

CRN

Use CRN pumps in systems where all parts in contact with the liquid are made of high-grade stainless steel.

5.2.2 Pumped liquids

DANGER

Fire and explosion

Death or serious personal injury
- Do not use the pump for flammable, combustible or explosive liquids.

WARNING

Chemical attack and leakage

Death or serious personal injury
- Do not use the pump for liquids which can attack the pump materials chemically.
- Contact Grundfos if in doubt.

WARNING

Corrosive liquids

Death or serious personal injury
- Wear personal protective equipment.

WARNING

Toxic liquids

Death or serious personal injury
- Wear personal protective equipment.

CAUTION

Hot or cold liquid

Minor or moderate personal injury
- Wear personal protective equipment.

CR, CRI and CRN pump are suitable for pumping thin, clean, non-flammable, non-combustible or non-explosive liquids, not containing solid particles or fibres.

When pumping liquids with a density and/or viscosity higher than that of water, use motors with correspondingly higher outputs, if required.

6. Servicing the product

DANGER

Electric shock

Death or serious personal injury
- Before starting any work on the product, make sure that the power supply has been switched off and that it cannot be accidentally switched on.

WARNING

Electric shock

Death or serious personal injury
- Connect the pump to the same protective-earth (PE) potential as the motor if both motor bearings are of the insulated type, such as ceramic bearings.

WARNING

Falling objects

Death or serious personal injury
- Follow the lifting instructions.
- Use lifting equipment which is approved for the weight of the product.
- Persons must keep a safe distance to the product during lifting operations.
- Wear personal protective equipment.

For lifting instructions, see section *2.4 Lifting the product*.

WARNING

Falling objects

Death or serious personal injury
- Keep the product in a stable and fixed position when working on it.

WARNING

Corrosive liquids

Death or serious personal injury
- Wear personal protective equipment.

WARNING

Toxic liquids

Death or serious personal injury
- Wear personal protective equipment.

WARNING

Contamination when pumping drinking water

Death or serious personal injury

- Before the pump is used for supplying drinking water, flush the pump thoroughly with clean water.
- Do not use the pump for drinking water if the internal parts have been in contact with particles or substances not suitable for water intended for human consumption.
- Always use original spare parts suitable for drinking water.

CAUTION

Hot or cold liquid

Minor or moderate personal injury

- Wear personal protective equipment.

CAUTION

Hot or cold surface

Minor or moderate personal injury

- Make sure that no one can accidentally come into contact with hot or cold surfaces.

We recommend that you repair pumps with motors of 7.5 kW and above at the installation site. Necessary lifting equipment must be available.

6.1 Contaminated products

CAUTION

Biological hazard

Minor or moderate personal injury

- Flush the product thoroughly with water and rinse the product parts in water after dismantling.

The product will be classified as contaminated if it has been used for a liquid which is injurious to health or toxic.

If you request Grundfos to service the product, contact Grundfos with details about the liquid before returning the product for service. Otherwise, Grundfos can refuse to accept the product for service.

Any application for service must include details about the liquid.

Clean the product in the best possible way before you return it.

Costs of returning the product are to be paid by the customer.

6.2 Service documentation

6.2.1 Pump

Service documents and service kits are available in Grundfos Product Center (http://product-selection.grundfos.com).

6.2.2 Motor

Grundfos motors

Service documentation is available in Grundfos Product Center (http://product-selection.grundfos.com/).

If you have any questions, please contact the nearest Grundfos company or service workshop.

Other motors makes than MG

Contact the motor manufacturer.

6.3 Maintaining the product

DANGER

Electric shock

Death or serious personal injury

- Before starting any work on the product, make sure that the power supply has been switched off and that it cannot be accidentally switched on.

WARNING

Falling objects

Death or serious personal injury

- Follow the lifting instructions.
- Use lifting equipment which is approved for the weight of the product.
- Persons must keep a safe distance to the product during lifting operations.
- Wear personal protective equipment.

For lifting instructions, see section *2.4 Lifting the product*.

WARNING

Falling objects

Death or serious personal injury

- Keep the product in a stable and fixed position when working on it.

WARNING

Corrosive liquids

Death or serious personal injury

- Wear personal protective equipment.

WARNING

Toxic liquids

Death or serious personal injury

- Wear personal protective equipment.

CAUTION

Hot or cold liquid

Minor or moderate personal injury

- Wear personal protective equipment.

CAUTION

Hot or cold surface

Minor or moderate personal injury

- Make sure that no one can accidentally come into contact with hot or cold surfaces.

6.3.1 Pump

The pump bearings and the shaft seal are maintenance-free.

6.3.2 Motor

Carry out maintenance as described in the instructions for the motor which are supplied with the pump.

Motor bearings

Motors not fitted with grease nipples are maintenance-free.

Motors fitted with grease nipples must be lubricated with a high-temperature, lithium-based grease. See the instructions on the fan cover.

In the case of seasonal operation where the motor is idle for more than 6 months of the year, we recommend that you grease the motor when you take the pump out of operation.

Depending on the ambient temperature, replace or lubricate the motor bearings according to the table below. The table applies to 2-pole motors. The number of operating hours stated for bearing replacement are guidelines only.

Motor size [kW]	Bearing replacement interval [operating hours]				
	40 °C	45 °C	50 °C	55 °C	60 °C
0.37 - 0.75	18000	-	-	-	-
1.1 - 7.5	20000	15500	12500	10000	7500
Motor size [kW]	**Lubrication interval [operating hours]**				
	40 °C	45 °C	50 °C	55 °C	60 °C
11 - 18.5	4500	3400	2500	1700	1100
22	4000	3100	2300	1500	1000
30-55	4000	3000	2000	1500	-
75	2000	1500	1000	500	-

Intervals for 4-pole motors are twice as long as those for 2-pole motors.

If the ambient temperature is lower than 40 °C, then replace or lubricate the bearings at the intervals mentioned under 40 °C.

7. Taking the product out of operation

7.1 Frost protection

CAUTION

Hot or cold liquid

Minor or moderate personal injury

- Pay attention to the direction of the vent hole and drain plug when draining the pump. Make sure that the escaping liquid does not cause injury to persons.
- Wear personal protective equipment.

Pay attention to the direction of the vent hole and drain plug when draining the pump. Make sure that the escaping liquid does not cause damage to the motor or other components.

Drain pumps which are not being used during periods of frost to avoid damage.

To drain the pump loosen the vent screw in the pump head and remove all drain plugs from one side of the pump base.

Do not tighten the vent screw and replace the drain plug until the pump is to be used again.

CR, CRI, CRN 1s to 5

Before replacing the drain plug in the base, screw the bypass valve out against the stop. See fig. 18.

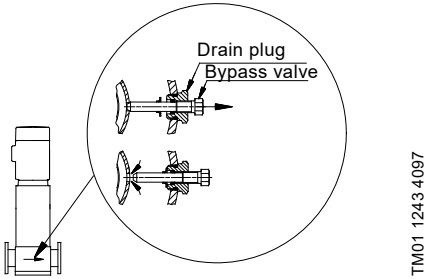

Fig. 18 Location of drain plug and bypass valve

Fit the drain plug by tightening the large union nut followed by the bypass valve.

7.2 Taking the product permanently out of operation

Observe the following if the pump is to be permanently taken out of operation and removed from the pipe system.

DANGER

Electric shock

Death or serious personal injury

- Before starting any work on the product, make sure that the power supply has been switched off and that it cannot be accidentally switched on.

WARNING

Falling objects

Death or serious personal injury

- Follow the lifting instructions.
- Use lifting equipment which is approved for the weight of the product.
- Persons must keep a safe distance to the product during lifting operations.
- Wear personal protective equipment.

For lifting instructions, see section *2.4 Lifting the product*.

WARNING

Falling objects

Death or serious personal injury

- Keep the product in a stable and fixed position when working on it.

WARNING

Corrosive liquids

Death or serious personal injury

- Wear personal protective equipment.

WARNING

Toxic liquids

Death or serious personal injury

- Wear personal protective equipment.

CAUTION

Hot or cold liquid

Minor or moderate personal injury

- Wear personal protective equipment.

CAUTION

Hot or cold surface

Minor or moderate personal injury

- Make sure that no one can accidentally come into contact with hot or cold surfaces.

8. Fault finding the product

DANGER

Electric shock

Death or serious personal injury

- Before starting any work on the product, make sure that the power supply has been switched off and that it cannot be accidentally switched on.

WARNING

Corrosive liquids

Death or serious personal injury

- Wear personal protective equipment.

WARNING

Toxic liquids

Death or serious personal injury

- Wear personal protective equipment.

WARNING

Falling objects

Death or serious personal injury

- Keep the product in a stable and fixed position when working on it.

CAUTION

Hot or cold liquid

Minor or moderate personal injury

- Wear personal protective equipment.

CAUTION

Hot or cold surface

Minor or moderate personal injury

- Make sure that no one can accidentally come into contact with hot or cold surfaces.

Fault	Cause	Remedy
1. The motor does not run when started.	a) Supply failure.	Connect the power supply.
	b) The fuses are blown.	Replace fuses.
	c) The motor-protective circuit breaker has tripped.	Reactivate the motor-protective circuit breaker.
	d) The thermal protection has tripped.	Reactivate the thermal protection.
	e) The main contacts in the motor-protective circuit breaker are not making contact or the coil is faulty.	Replace the contacts or the magnetic coil.
	f) The control circuit is defective.	Repair the control circuit.
	g) The motor is defective.	Replace the motor.
2. The motor-protective circuit breaker trips immediately when the power supply is switched on.	a) One fuse is blown or the automatic circuit breaker has tripped.	Replace the fuse or cut in the circuit breaker.
	b) The contacts in the motor-protective circuit breaker are faulty.	Replace the motor-protective circuit breaker contacts.
	c) The cable connection is loose or faulty.	Fasten or replace the cable connection.
	d) The motor winding is defective.	Replace the motor.
	e) The pump is mechanically blocked.	Remove the mechanical blocking of the pump.
	f) The motor-protective circuit breaker setting is too low.	Set the motor-protective circuit breaker correctly.
3. The motor-protective circuit breaker trips occasionally.	a) The motor-protective circuit breaker setting is too low.	Set the motor-protective circuit breaker correctly.
	b) Low voltage at peak times.	Ensure a stable power supply.
4. The motor-protective circuit breaker has not tripped, but the pump does not run.	a) See 1 a), b), d), e) and f).	

Fault	Cause	Remedy
5. The pump performance is not constant.	a) The pump inlet pressure is too low (cavitation).	Check the inlet conditions.
	b) The inlet pipe or pump is partly blocked by impurities.	Clean the inlet pipe or pump.
	c) The pump draws in air.	Check the inlet conditions.
6. The pump runs, but gives no water.	a) The inlet pipe or pump is blocked by impurities.	Clean the inlet pipe or pump.
	b) The foot or non-return valve is blocked in closed position.	Repair the foot or non-return valve.
	c) There is a leakage in the inlet pipe.	Repair the inlet pipe.
	d) There is air in the inlet pipe or pump.	Check the inlet conditions.
	e) The motor runs in the wrong direction of rotation.	Change the direction of rotation of the motor.
7. The pump runs backwards when switched off.	a) There is a leakage in the inlet pipe.	Repair the inlet pipe.
	b) The foot or non-return valve is defective.	Repair the foot or non-return valve.
8. Leakage in shaft seal.	a) The shaft seal is defective.	Replace the shaft seal.
9. Noise.	a) Cavitation.	Check the inlet conditions.
	b) The pump does not rotate freely due to frictional resistance as a result of incorrect pump shaft position.	Adjust the pump shaft. Follow the procedure in fig. 6, 7, 8 or in the appendix.
	c) Frequency converter operation.	See section *3.2.5 Frequency converter operation*.

9. Technical data

9.1 Operating conditions

9.1.1 Liquid temperature

Figure 1 in the appendix states the relationship between liquid temperature range and maximum permissible operating pressure.

! The maximum permissible operating pressure and liquid temperature ranges apply to the pump only.

9.1.2 Ambient temperature and altitude

Motor power [kW]	Motor make	Motor efficiency class	Maximum ambient temperature [°C]	Maximum altitude above sea level [m]
0.37 - 0.55	Grundfos MG	-	+40	1000
0.75 - 22	Grundfos MG	IE3	+60	3500
30.0 - 75.0	Siemens	IE3	+55	2750

! The maximum permissible ambient temperature is stated on the motor nameplate, and it must not be exceeded during operation to avoid damaging the motor.

If the maximum permissible ambient temperature is not stated on the motor nameplate, the motor must not be used in an ambient temperature above 40 °C.

If the ambient temperature exceeds the above temperature values or the pump is installed at an altitude exceeding the above altitude values, the motor must not be fully loaded due to the risk of overheating. Overheating may result from excessive ambient temperatures or the low density and consequently low cooling effect of the air.

In such cases, it may be necessary to use a motor with a higher rated output.

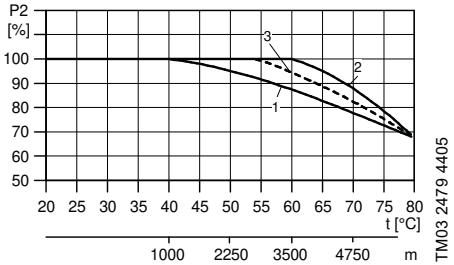

Fig. 19 Motor output in relation to temperature and altitude

Pos.	Motor power [kW]	Motor make
1	0.37 - 0.55	MG
	0.37 - 22	MGE
2	0.75 - 22	MG
3	30.0 - 75.0	Siemens

Example

Figure 19 shows that the load of an IE3 motor at an ambient temperature of 70 °C must not exceed 89 % of the rated output.

If the pump is installed 4750 m above sea level, the motor must not be loaded more than 89 % of the rated output.

In cases where both the maximum temperature and the maximum altitude are exceeded, the derating factors must be multiplied (0.89 x 0.89 = 0.79).

9.1.3 Maximum permissible operating pressure and liquid temperature for the shaft seal

The diagram below applies to clean water and water containing antifreeze liquids.

CR, CRI, CRN 1s to 20 and CR, CRN 32 to 64

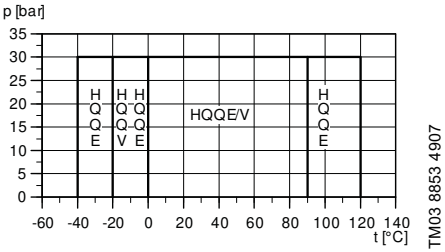

Fig. 20 Maximum permissible operating pressure and liquid temperature

Standard shaft seal	Motor [kW]	Temperature range [°C]
HQQE	0.37 - 45	-40 to +120
HBQE	55-75	0 to 120
HQQV	0.37 - 45	-20 to +90
HBQV	55-75	0 to 90

You can clean CRI and CRN pumps in place (CIP) with a type H shaft seal with EPDM rubber parts, HxxE and liquids up to 64 °C for maximum 15 minutes.

The pumping of liquids above 120 °C may result in periodical noise and reduced pump life.

CR, CRI, CRN pumps are not suitable for the pumping of liquids above 120 °C for long periods.

9.1.4 Minimum inlet pressure

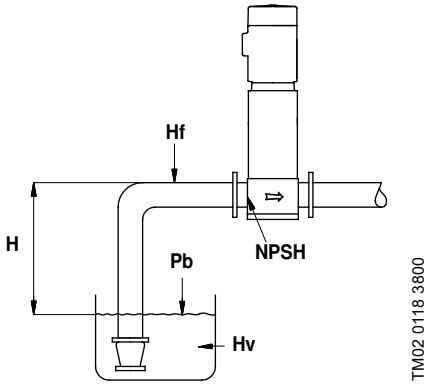

Fig. 21 Schematic view of open system with a CR pump

Calculate the maximum suction lift "H" in m head as follows:

H = Pb x 10.2 - NPSH - Hf - Hv - Hs

Pb = Barometric pressure in bar.
Barometric pressure can be set to 1 bar.
In closed systems, Pb indicates the system pressure in bar.
(10 bar = 1 MPa)

NPSH = Net Positive Suction Head in m head, to be read from the NPSH curve inthe appendix (at the highest flow the pump will be delivering.

Hf = Friction loss in the inlet pipe in m head at the highest flow the pump will be delivering.

Hv = Vapour pressure for water in m head. See fig. 5 in the appendix.
If the pumped liquid is not water, then use the vapour pressure for the liquid which is being pumped.

tm = Liquid temperature.

Hs = Safety margin = minimum 0.5 m head.

If the calculated "H" is positive, the pump can operate at a suction lift of maximum "H" m head.

If the calculated "H" is negative, an inlet pressure of minimum "H" m head is required. There must be a pressure equal to the calculated "H" during operation.

Example

Pb = 1 bar.

Pump type: CR 15, 50 Hz.

Flow rate: 15 m^3/h.

NPSH (see the appendix): 1.1 m head.

Hf = 3.0 m head.

Liquid temperature: 60 °C.

Hv (from fig. 5 in the appendix): 2.1 m head.

H = Pb x 10.2 - NPSH - Hf - Hv - Hs [m head].

H = 1 x 10.2 - 1.1 - 3.0 - 2.1 - 0.5 = 3.5 m head.

This means that the pump can operate at a suction lift of maximum 3.5 m head.

Pressure calculated in bar: 3.5 x 0.0981 = 0.343 bar.

Pressure calculated in kPa: 3.5 x 9.81 = 34.3 kPa.

9.1.5 Maximum permissible inlet pressure

The tables in the appendix state the maximum permissible inlet pressure. However, the actual inlet pressure + the maximum pump pressure at no flow must always be lower than the values stated in fig. 1 in the appendix.

The pumps are pressure-tested at a pressure of 1.5 times the values stated in fig. 1 in the appendix.

9.1.6 Minimum flow rate

WARNING

Too high pressure and leakage

Death or serious personal injury

- Do not run the pump against a closed outlet valve.

Due to the risk of overheating, do not use the pump at flows below the minimum flow rate.

The curves below show the minimum flow rate as a percentage of the rated flow rate in relation to the liquid temperature.

- - - - = air-cooled top.

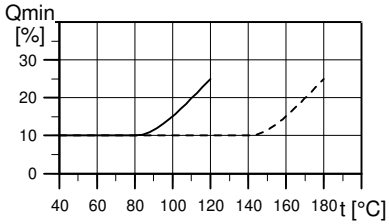

TM01 2816 2302

Fig. 22 Minimum flow rate

9.1.7 Maximum flow rate

The table in the appendix states the maximum flow rate. See fig. 2 in the appendix.

9.2 Electrical data

See the motor nameplate.

9.3 Dimensions and weights

Dimensions: See fig. 3 in the appendix.

Weights: See label on the packing.

9.3.1 Sound pressure level

See fig. 4 in the appendix.

10. Disposing of the product

This product or parts of it must be disposed of in an environmentally sound way:

1. Use the public or private waste collection service.
2. If this is not possible, contact the nearest Grundfos company or service workshop.

The crossed-out wheelie bin symbol on a product means that it must be disposed of separately from household waste. When a product marked with this symbol reaches its end of life, take it to a collection point designated by the local waste disposal authorities. The separate collection and recycling of such products will help protect the environment and human health.

See also end-of-life information at www.grundfos.com/product-recycling.

NPSH

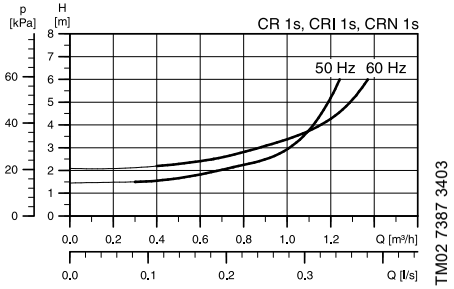
CR 1s, CRI 1s, CRN 1s
p [kPa]
H [m]
50 Hz
60 Hz
Q [m³/h]
Q [l/s]
TM02 7387 3403

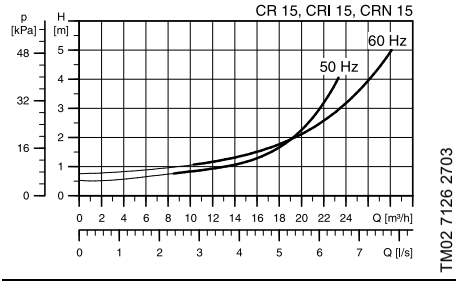
CR 15, CRI 15, CRN 15
p [kPa]
H [m]
50 Hz
60 Hz
Q [m³/h]
Q [l/s]
TM02 7126 2703

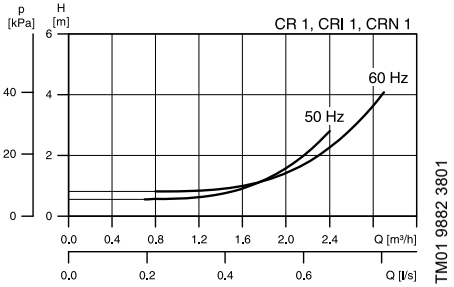
CR 1, CRI 1, CRN 1
p [kPa]
H [m]
50 Hz
60 Hz
Q [m³/h]
Q [l/s]
TM01 9882 3801

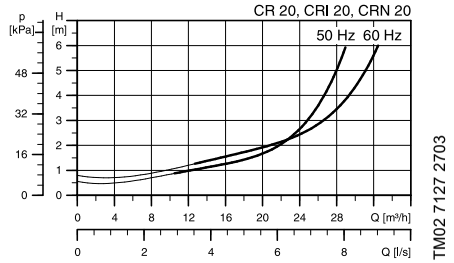
CR 20, CRI 20, CRN 20
p [kPa]
H [m]
50 Hz
60 Hz
Q [m³/h]
Q [l/s]
TM02 7127 2703

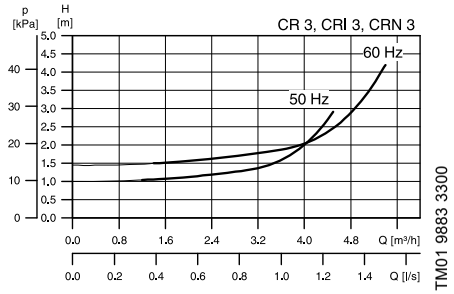
CR 3, CRI 3, CRN 3
p [kPa]
H [m]
50 Hz
60 Hz
Q [m³/h]
Q [l/s]
TM01 9883 3300

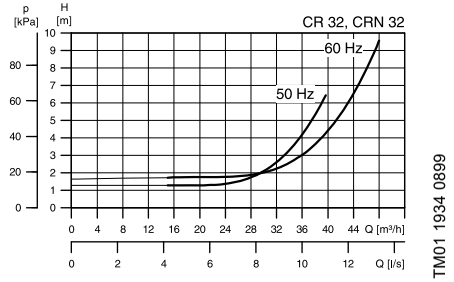
CR 32, CRN 32
p [kPa]
H [m]
50 Hz
60 Hz
Q [m³/h]
Q [l/s]
TM01 1934 0899

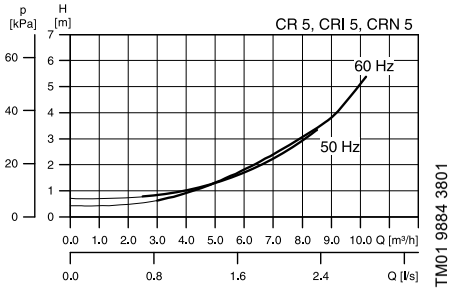
CR 5, CRI 5, CRN 5
p [kPa]
H [m]
50 Hz
60 Hz
Q [m³/h]
Q [l/s]
TM01 9884 3801

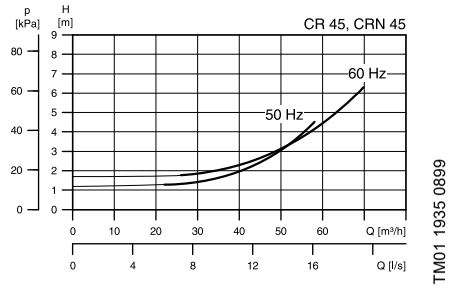
CR 45, CRN 45
p [kPa]
H [m]
50 Hz
60 Hz
Q [m³/h]
Q [l/s]
TM01 1935 0899

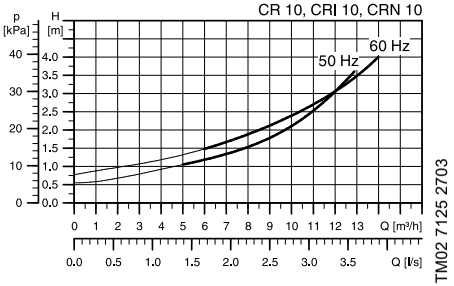
CR 10, CRI 10, CRN 10
p [kPa]
H [m]
60 Hz
50 Hz
Q [m³/h]
Q [l/s]
TM02 7125 2703

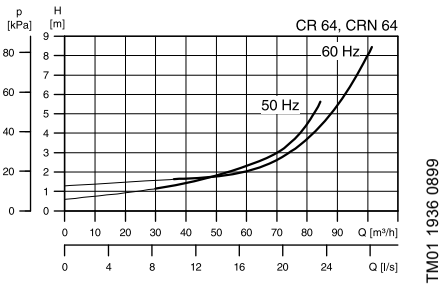
CR 64, CRN 64
p [kPa]
H [m]
60 Hz
50 Hz
Q [m³/h]
Q [l/s]
TM01 1936 0899

Fig. 1 Maximum permissible operating pressure and liquid temperature

50 Hz

	Oval		PJE - CLAMP - CA - UNION DIN - FGJ	
	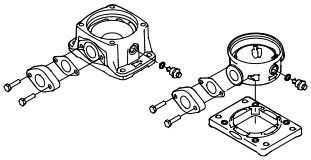		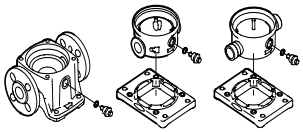	
	Operating pressure	**Liquid temperature range**	**Operating pressure**	**Liquid temperature range**
CR, CRI, CRN 1s	16 bar	-20 to +120 °C	25 bar	-20 to +120 °C
CR, CRI, CRN 1	16 bar	-20 to +120 °C	25 bar	-20 to +120 °C
CR, CRI, CRN 3	16 bar	-20 to +120 °C	25 bar	-20 to +120 °C
CR, CRI, CRN 5	16 bar	-20 to +120 °C	25 bar	-20 to +120 °C
CR, CRI 10-1→ 10-16	16 bar	-20 to +120 °C	16 bar	-20 to +120 °C
CR, CRI 10-17 → 10-22	-	-	25 bar	-20 to +120 °C
CRN 10	-	-	25 bar	-20 to +120 °C
CR, CRI 15-1 → 15-7	10 bar	-20 to +120 °C	-	-
CR, CRI 15-1 → 15-10	-	-	16 bar	-20 to +120 °C
CR, CRI 15-12→ 15-17	-	-	25 bar	-20 to +120 °C
CRN 15	-	-	25 bar	-20 to +120 °C
CR, CRI 20-1 → 20-7	10 bar	-20 to +120 °C	-	-
CR, CRI 20-1 → 20-10	-	-	16 bar	-20 to +120 °C
CR, CRI 20-12 → 20-17	-	-	25 bar	-20 to +120 °C
CRN 20	-	-	25 bar	-20 to +120 °C
CR, CRN 32-1-1 → 32-7	-	-	16 bar	-30 to +120 °C
CR, CRN 32-8-2 → 32-14	-	-	30 bar	-30 to +120 °C
CR, CRN 45-1-1 → 45-5	-	-	16 bar	-30 to +120 °C
CR, CRN 45-6-2 → 45-11	-	-	30 bar	-30 to +120 °C
CR, CRN 45-12-2 → 45-13-2	-	-	33 bar	-30 to +120 °C
CR, CRN 64-1-1 → 64-5	-	-	16 bar	-30 to +120 °C
CR, CRN 64-6-2 → 64-8-1	-	-	30 bar	-30 to +120 °C

60 Hz

	Oval		PJE - CLAMP - CA - UNION DIN - FGJ	
	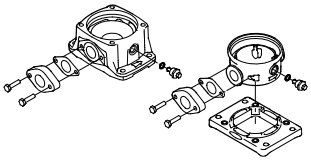		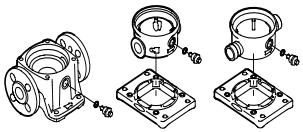	
	Operating pressure	**Liquid temperature range**	**Operating pressure**	**Liquid temperature range**
CR, CRI, CRN 1s	16 bar	-20 to +120 °C	25 bar	-20 to +120 °C
CR, CRI, CRN 1	16 bar	-20 to +120 °C	25 bar	-20 to +120 °C
CR, CRI, CRN 3	16 bar	-20 to +120 °C	25 bar	-20 to +120 °C
CR, CRI, CRN 5	16 bar	-20 to +120 °C	25 bar	-20 to +120 °C
CR, CRI 10-1 → 10-10	16 bar	-20 to +120 °C	16 bar	-20 to +120 °C
CR, CRI 10-12 → 10-17	-	-	25 bar	-20 to +120 °C
CRN 10	16 bar	-20 to +120 °C	25 bar	-20 to +120 °C
CR, CRI 15-1→ 15-5	10 bar	-20 to +120 °C	-	-
CR, CRI 15-1→ 15-8	-	-	16 bar	-20 to +120 °C
CR, CRI 15-9→ 15-12	-	-	25 bar	-20 to +120 °C
CRN 15	10 bar	-20 to +120 °C	25 bar	-20 to +120 °C
CR, CRI 20-1→ 20-5	10 bar	-20 to +120 °C	-	-
CR, CRI 20-1 → 20-7	-	-	16 bar	-20 to +120 °C
CR, CRI 20-8→ 20-10	-	-	25 bar	-20 to +120 °C
CRN 20	10 bar	-20 to +120 °C	25 bar	-20 to +120 °C
CR, CRN 32-1-1→ 32-5	-	-	16 bar	-30 to +120 °C
CR, CRN 32-6-2→ 32-10-2	-	-	30 bar	-30 to +120 °C
CR, CRN 45-1-1→ 45-4	-	-	16 bar	-30 to +120 °C
CR, CRN 45-5-2→ 45-7	-	-	30 bar	-30 to +120 °C
CR, CRN 64-1-1→ 64-3	-	-	16 bar	-30 to +120 °C
CR, CRN 64-4-2→ 64-5-2	-	-	30 bar	-30 to +120 °C

Fig. 2 Maximum inlet pressure and flow rate for CR, CRI and CRN

50 Hz

Pump type	Maximum inlet pressure [bar]	Maximum inlet pressure [MPa]	Maximum flow rate [m³/h]
CR, CRI, CRN 1s			1.1
1s-2 → 1s-36	10	1	
CR, CRI, CRN 1			2.4
1-2 → 1-36	10	1	
CR, CRI, CRN 3			4.5
3-2 → 3-29	10	1	
3-31 → 3-36	15	1.5	
CR, CRI, CRN 5			8.5
5-2 → 5-16	10	1	
5-18 → 5-36	15	1.5	
CR, CRI, CRN 10			13
10-1 → 10-6	8	0.8	
10-7 → 10-22	10		
CR, CRI, CRN 15			24
15-1 → 15-3	8	0.8	
15-4 → 15-17	10	1	
CR, CRI, CRN 20			29
20-1 → 20-3	8	0.8	
20-4 → 20-17	10	1	
CR, CRN 32			40
32-1-1 → 32-4	4	0.4	
32-5-2 → 32-10	10	1	
32-11-2 → 32-14	15	1.5	
CR, CRN 45			58
45-1-1 → 45-2	4	0.4	
45-3-2 → 45-5	10	1	
45-6-2 → 45-13-2	15	1.5	
CR, CRN 64			85
64-1-1 → 64-2-2	4	0.4	
64-2-1 → 64-4-2	10	1	
64-4-1 → 64-8-1	15	1.5	

60 Hz

Pump type	Maximum inlet pressure [bar]	Maximum inlet pressure [MPa]	Maximum flow rate [m³/h]
CR, CRI, CRN 1s			1.3
1s-2 → 1s-27	10	1	
CR, CRI, CRN 1			2.9
1-2 → 1-25	10	1	
1-27	15	1.5	
CR, CRI, CRN 3			5.4
3-2 → 3-17	10	1	
3-19 → 3-25	15	1.5	
CR, CRI, CRN 5			10.2
5-2 → 5-9	10	1	
5-10 → 5-24	15	1.5	
CR, CRI, CRN 10			16
10-1 → 10-5	8	0.8	
10-6 → 10-17	10	1	
CR, CRI, CRN 15			29
15-1 → 15-2	8	0.8	
15-3 → 15-12	10	1	
CR, CRI, CRN 20			35
20-1	8	0.8	
20-2 → 20-10	10	1	
CR, CRN 32			48
32-1-1 → 32-2	4	0.4	
32-3-2 → 32-6	10	1	
32-7-2 → 32-10-2	15	1.5	
CR, CRN 45			70
45-1-1 → 45-1	4	0.4	
45-2-2 → 45-3	10	1	
45-4-2 → 45-7	15	1.5	
CR, CRN 64			102
64-1-1	4	0.4	
64-1 → 64-2-1	10	1	
64-2 → 64-5-2	15	1.5	

Fig. 3 Dimensions

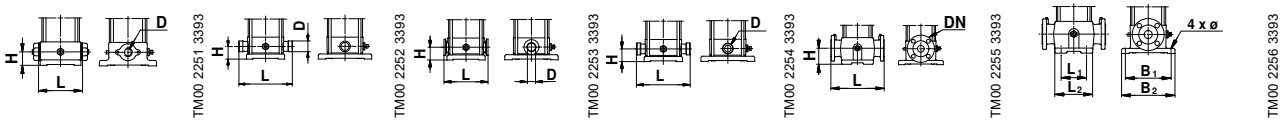

Pump Type	Oval			PJE			CLAMP - FlexiClamp			UNION			DIN - FGJ							
	L [mm]	H [mm]	D [Rp]	L [mm]	H [mm]	D [mm]	L [mm]	H [mm]	D [mm]	L [mm]	H [mm]	D [G]	L [mm]	H [mm]	DN	L_1 [mm]	L_2 [mm]	B_1 [mm]	B_2 [mm]	Ø [mm]
CR 1s	160	50	1	-	-	-	-	-	-	-	-	-	250	75	25/32	100	145	180	220	13
CRI, CRN 1s	-	-	-	210	50	42.2	162	50	30	228	50	2	250	75	25/32	100	64	180	220	13
CR 1	160	50	1	-	-	-	-	-	-	-	-	-	250	75	25/32	100	145	180	220	13
CRI, CRN 1	-	-	-	210	50	42.2	162	50	30	228	50	2	250	75	25/32	100	64	180	220	13
CR 3	160	50	1	-	-	-	-	-	-	-	-	-	250	75	25/32	100	145	180	220	13
CRI, CRN 3	-	-	-	210	50	42.2	162	50	30	228	50	2	250	75	25/32	100	64	180	220	13
CR 5	160	50	1 1/4	-	-	-	-	-	-	-	-	-	250	75	25/32	100	145	180	220	13
CRI, CRN 5	-	-	-	210	50	42.2	162	50	30	228	50	2	250	75	25/32	100	64	180	220	13
CR 10	200	80	1 1/2	-	-	-	-	-	-	-	-	-	280	80	40	130	178	215	256	13.5
CRI, CRN 10	-	-	-	261	80	60.1	202	80	50	-	-	-	280	80	40	130	200	215	248	13
CR 15	200	90	2	-	-	-	-	-	-	-	-	-	300	90	50	130	176	215	256	13.5
CRI, CRN 15	-	-	-	261	90	60.1	202	90	50	-	-	-	300	90	50	130	200	215	248	13
CR 20	200	90	2	-	-	-	-	-	-	-	-	-	300	90	50	130	176	215	256	13.5
CRI, CRN 20	-	-	-	261	90	60.1	202	90	50	-	-	-	300	90	50	130	200	215	248	13
CR 32	-	-	-	-	-	-	-	-	-	-	-	-	320	105	65	170	223	240	298	14
CRN 32	-	-	-	326	105	88.9	-	-	-	-	-	-	320	105	65	170	226	240	298	14
CR 45	-	-	-	-	-	-	-	-	-	-	-	-	365	140	80	190	248	266	331	14
CRN 45	-	-	-	365	135	114.3	-	-	-	-	-	-	365	140	80	190	251	266	331	14
CR 64	-	-	-	-	-	-	-	-	-	-	-	-	365	140	100	190	248	266	331	14
CRN 64	-	-	-	365	135	114.3	-	-	-	-	-	-	365	140	100	190	251	266	331	14

Fig. 4 Airborne noise emitted by pumps with motors fitted by Grundfos

50 Hz		60 Hz	
Motor [kW]	**L_{pA} [dB(A)] (ISO3743-2/ ISO1680 50 Hz)**	**Motor [kW]**	**L_{pA} [dB(A)] (ISO3743-2/ ISO1680 60 Hz)**
0.37	50	0.37	55
0.55	50	0.55	53
0.75	50	0.75	54
1.1	52	1.1	57
1.5	54	1.5	59
2.2	54	2.2	59
3.0	55	3.0	60
4.0	62	4.0	66
5.5	60	5.5	65
7.5	60	7.5	65
11	60	11	65
15	60	15	65
18.5	60	18.5	65
22	66	22	70
30	67	33.5	78
37	67	41.5	78
45	67.5	51	72
55	71.5	62	76
75	74	84	78
90	73	101	77.5
110	74	123	78.5
132	73.5	148	78
160	77	180	81.5
200	76.5	224	81.5

Fig. 5

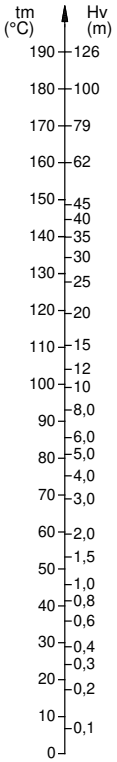

TM02 7445 3503

Fig. 6 CR, CRI, CRN 1s, 1, 3 and 5

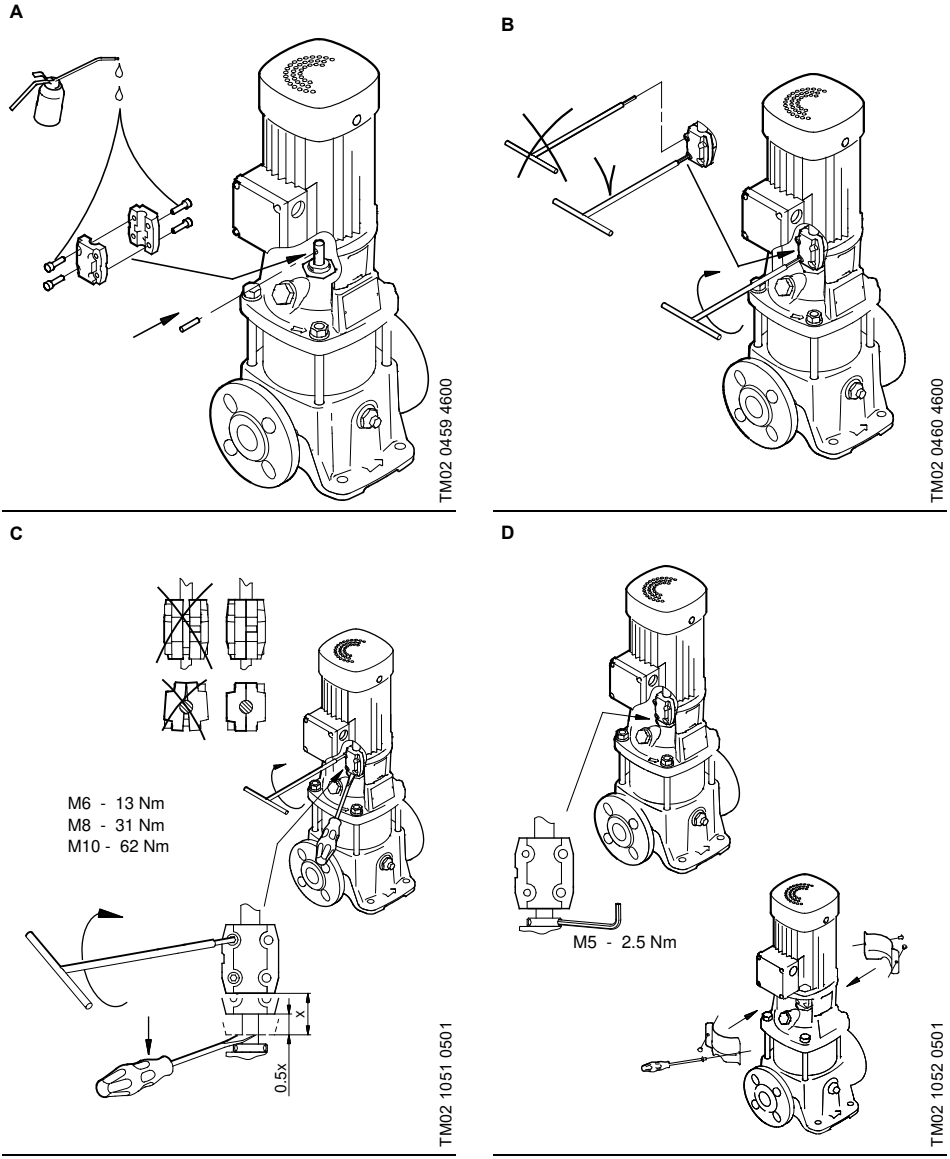

Fig. 7 CR, CRI, CRN 10, 15 and 20

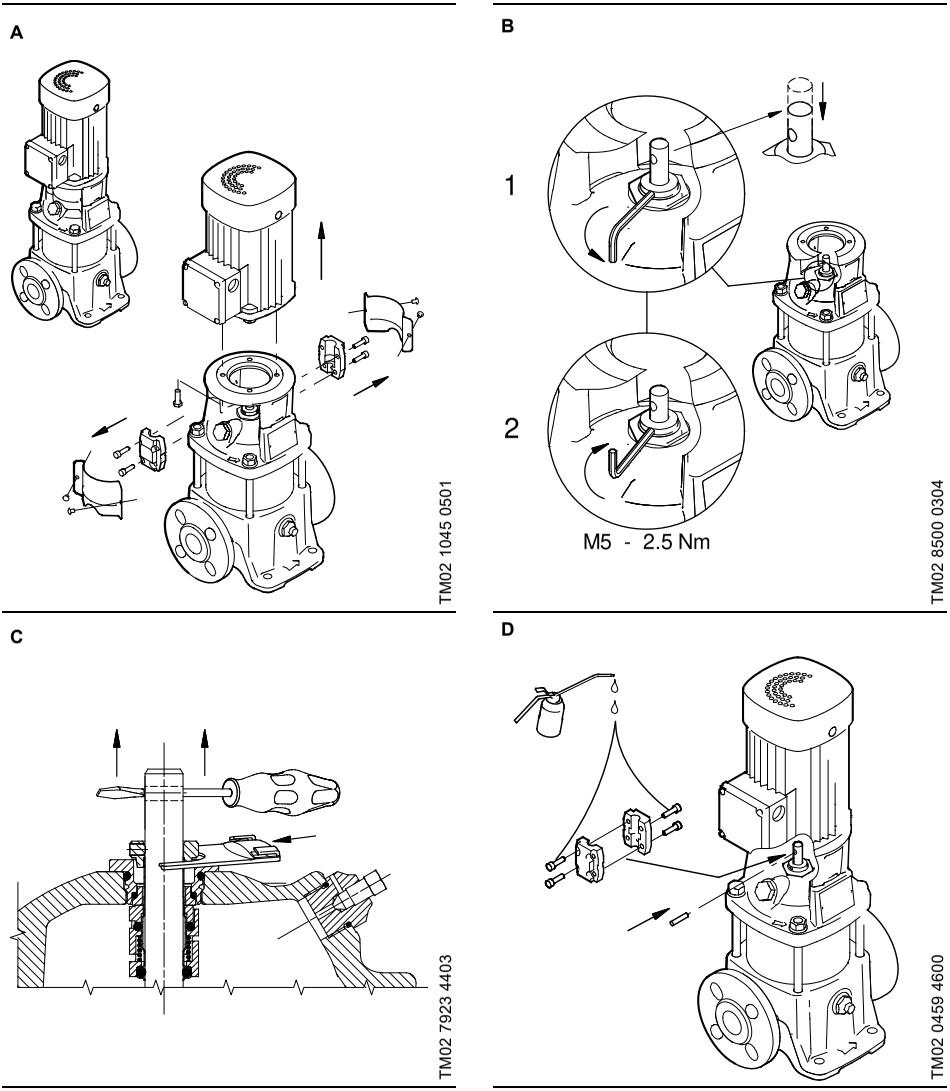

E

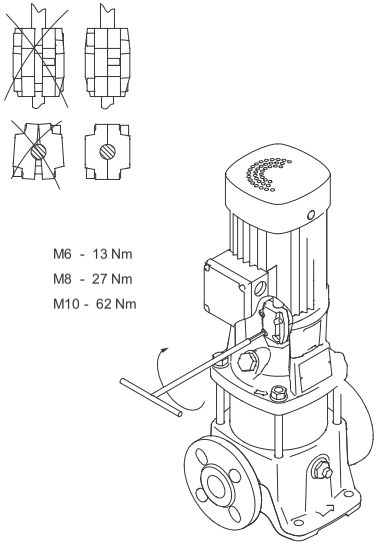

TM02 8542 3620

F

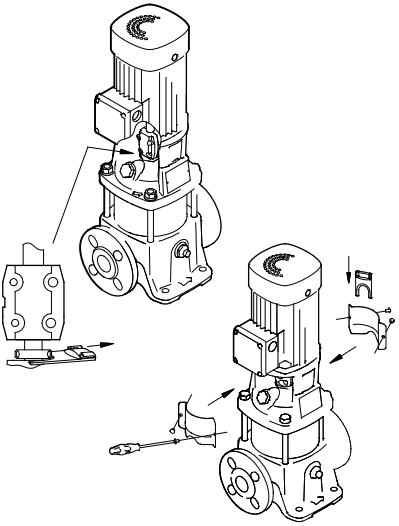

TM02 8515 0304

Fig. 8 CR, CRN 32, 45, 64

A

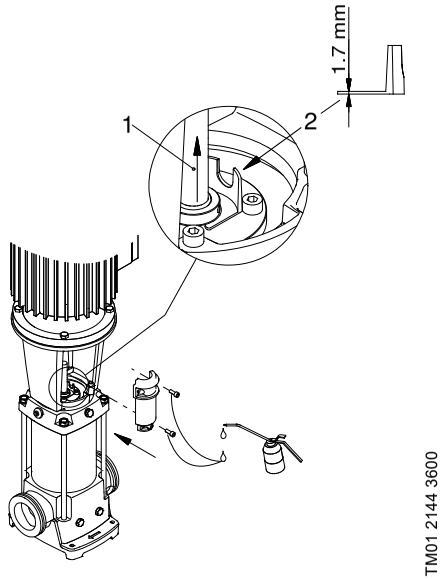

B

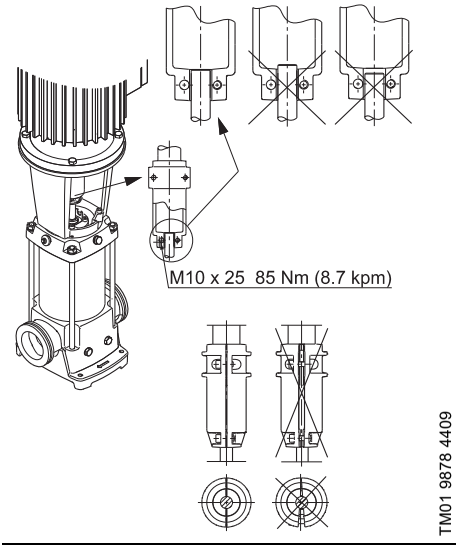

C

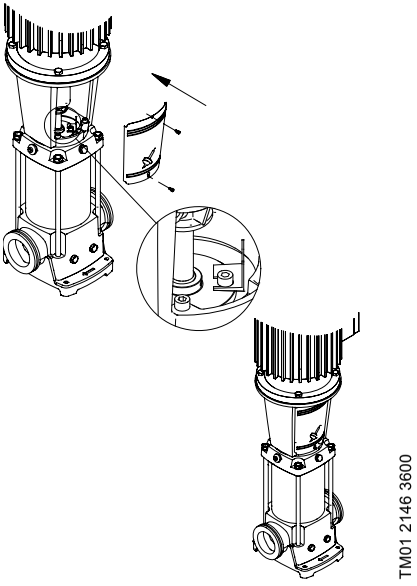

Pos.	Designation				
	GB	BG	CZ	DE	DK
1	Adapter flange	Преходен фланец	Mezipříruba	Zwischenflansch	Mellemflange
1a	Motor stool	Столче на двигателя	Lucernaty motoru	Laterne	Mellemstykke
2	Pump head	Глава на помпата	Hlava čerpadla	Kopfstück	Topstykke
3	Chamber, top	Горна камера	Horní článek	Oberste Kammer	Kammer, øverste
3a	Chamber without neck ring	Камера без пръстен	Článek bez mezerového kroužku	Kammer ohne Spaltring	Kammer uden tætningsring
4	Chamber complete	Камера - комплект	Kompletní článek	Kammer komplett	Kammer komplet
4a	Chamber with bearing ring	Камера с лагерен пръстен	Článek s kroužkem ložiska	Kammer mit Lagerring	Kammer med lejering
5a	Chamber complete	Камера - комплект	Kompletní článek	Kammer komplett	Kammer komplet
6	Base	Основа	Patka	Fußstück	Fodstykke
6a	Stop pin	Шплент	Zarážkový kolík	Sperrzapfen	Rotationslås
6d	Guide plate for base	Водеща плоча за основата	Vodicí deska patky	Führungsplatte für Fußstück	Styreplade til fodstykke
6g	Bearing ring	Ролков лагер	Kroužek ložiska	Lagerring	Lejering
7	Coupling guard	Предпазен капак на съединителят	Kryt spojky	Schutzschirm	Skærm
7a	Screw	Винт	Šroub	Schraube	Skrue
8	Coupling complete	Съединител - комплект	Kompletní spojka	Kupplung komplett	Kobling komplet
9	Screw	Винт	Šroub	Schraube	Skrue
10	Shaft pin	Шплент на вала	Válcový kolík	Zylinderstift	Stift
10a	Coupling half	Половина на съединението	Půlspojka	Kupplungshälfte	Koblingshalvpart
12	Flange (oval)	Фланец (овален)	Příruba (oválná)	Flansch (oval)	Flange (oval)
18	Air vent screw	Винт за обезвъздушаване	Odvzdušňovací šroub	Entlüftungsschraube	Luftskrue
19	Pipe plug	Тапа на тръбата	Zátka	Stopfen	Rørprop
21	Plug	Пробка	Zátka	Stopfen	Prop
23	Plug	Пробка	Zátka	Stopfen	Prop
25	Drain plug	Пробка за дрениране	Vypouštěcí zátka	Entleerungsstopfen	Tømmeprop
26	Staybolt	Шпилка	Rozpěrný šroub	Stehbolzen	Støttebolt
26a	Strap	Лента	Stahovací pás	Spannband	Spændebånd
26b	Screw	Винт	Šroub	Schraube	Skrue
26c	Washer	Шайба	Podložka	Unterlegscheibe	Spændeskive
28	Screw	Винт	Šroub	Schraube	Skrue
28a	Screw	Винт	Šroub	Schraube	Skrue
31	Screw	Винт	Šroub	Schraube	Skrue
32	Washer	Шайба	Podložka	Unterlegscheibe	Spændeskive
32a	Washer	Шайба	Podložka	Unterlegscheibe	Spændeskive
35	Screw	Винт	Šroub	Schraube	Skrue
36	Nut	Гайка	Matice	Mutter	Møtrik
36a	Nut	Гайка	Matice	Mutter	Møtrik
37	O-ring/gasket	О-пръстен/уплътнение	O-kroužek/těsnicí kroužek	O-Ring/Dichtung	O-ring/pakning
38	O-ring	О-пръстен	O-kroužek	O-Ring	O-ring
38a	O-ring	О-пръстен	O-kroužek	O-Ring	O-ring
39	Gasket	Уплътнение	Těsnění	Dichtung	Pakning
44	Inlet part complete	Входяща част - комплект	Kompletní vtoková část	Einlaufteil komplett	Indløbsdel komplet
44a	Inlet part upper	Входна част, горна	Vtoková část horní	Oberes Einlaufteil	Øvre indløbsdel
44b	Inlet part lower	Входна част, долна	Vtoková část spodní	Unteres Einlaufteil	Nedre indløbsdel
45	Neck ring	Пръстен	Mezerový kroužek	Spaltring	Tætningsring
45a	Neck ring complete	Пръстен - комплект	Kompletní mezerový kroužek	Spaltring komplett	Tætningsring komplet

Pos.	Designation				
	GB	BG	CZ	DE	DK
47	Bearing ring	Търкалящ лагер	Kroužek ložiska	Lagerring	Lejering
47a	Bearing with driver	Търкалящ лагер с винт за застопоряване	Ložisko s unašečem	Lager mit Mitnehmer	Leje med medbringer
47b	Bearing ring, rotating	Търкалящ лагер - въртящ	Kroužek ložiska otočný	Lagerring, rotierend	Lejering, roterende
47c	Bush	Лагерна втулка	Pouzdro	Buchse	Bøsning
47d	Retaining ring	Спирателен пръстен	Přídržný kroužek	Haltering	Låsering
47e	Retaining ring	Спирателен пръстен	Přídržný kroužek	Haltering	Låsering
48	Split cone nut	Гайка на разрязания конус	Matice upínacího pouzdra	Mutter für Klemmbuchse	Møtrik for klembøsning
49	Impeller	Работно колело	Oběžné kolo	Laufrad	Løber
49a	Impeller	Работно колело	Oběžné kolo	Laufrad	Løber
49b	Split cone	Разрязан конус	Upínací pouzdro	Klemmbuchse	Klembøsning
49c	Wear ring	Износващ се пръстен	Těsnicí kruh	Verschleißring	Slidring
50a	Outlet part/top guide vanes	Нагнетателна част/ горен направляващ апарат	Výtlačná část/horní vodicí lopatky	Auslass/oberster Leitapparat	Afgangsdel/øvre ledeapparat
51	Pump shaft	Вал на помпата	Hřídel čerpadla	Pumpenwelle	Pumpeaksel
55	Sleeve	Външна втулка	Vnější plášť	Mantel	Svøb
56	Base plate	Основна плоча	Základová deska	Grundplatte	Fodplade
56a	Base plate	Основна плоча	Základová deska	Grundplatte	Fodplade
56c	Screw	Винт	Šroub	Schraube	Skrue
56d	Washer	Шайба	Podložka	Unterlegscheibe	Spændeskive
57	O-ring	О-пръсетн	O-kroužek	O-Ring	O-ring
58	Seal carrier	Носач на уплътнението	Unašeč ucpávky	Halter für Wellenabdichtung	Holder for akseltætning
58a	Screw	Винт	Šroub	Schraube	Skrue
60	Spring	Пружина	Pružina	Feder	Fjeder
61	Seal driver	Водач	Unašeč	Mitnehmer	Medbringer
62	Stop ring	Зегерка	Dorazový kroužek	Stopring	Stopring
64	Spacing pipe	Дистанционна тръба	Distanční pouzdro	Distanzhülse	Afstandsbøsning
64a	Spacing pipe	Дистанционна тръба	Distanční pouzdro	Distanzhülse	Afstandsbøsning
64b	Spacing pipe	Дистанционна тръба	Distanční pouzdro	Distanzhülse	Afstandsbøsning
64c	Clamp, splined	Шлицова клема	Drážková spona	Spannstück, Vielnut	Spændestykke, spline
64d	Spacing pipe	Дистанционна тръба	Distanční pouzdro	Distanzhülse	Afstandsbøsning
65	Neck ring retainer	Държач на пръстена	Přídržka mezerového kroužku	Halter für Spaltring	Holder for tætningsring
66	Washer	Шайба	Podložka	Unterlegscheibe	Spændeskive
66a	Washer	Шайба	Podložka	Unterlegscheibe	Spændeskive
66b	Lock washer	Контра - шайба	Pojistná podložka	Sicherungsblech	Låseskive
67	Nut/screw	Гайка/Винт	Matice/Šroub	Mutter/Schraube	Møtrik/Skrue
69	Spacing pipe	Дистанционна тръба	Distanční pouzdro	Distanzhülse	Afstandsbøsning
76	Nameplate set	Табела - комплект	Sada štítků	Schildersatz	Skiltesæt
76a	Rivet	Нит	Nýt	Niete	Nitte
77	Pump head cover	Капак на главата на помпата	Kryt hlavy čerpadla	Mantel für Pumpenkopf	Overdækning til pumpehoved
100	O-ring	О-пръстен	O-kroužek	O-Ring	O-ring
105	Shaft seal	Уплътнение на вала	Hřídelová ucpávka	Wellenabdichtung	Akseltætning
201	Flange	Фланец	Příruba	Flansch	Flange
203	Retaining ring	Спирателен пръстен	Přídržný kroužek	Haltering	Låsering

Pos.	Designation				
	EE	ES	FI	FR	GR
1	Ülemineku äärik	Brida acoplamiento	Välilaippa	Bride d'adaptation	Φλάντζα προσαρμογής
1a	Mootoripukk	Acoplamiento	Moottorin jalusta	Lanterne moteur	Στήριγμα κινητήρα
2	Pumba pea	Cabezal bomba	Pumppupää	Tête de pompe	Κεφαλή αντλίας
3	Ülemine vahepesa	Cámara superior	Pesä/ylin	Chambre supérieure	Θάλαμος, άνω
3a	Tihendusrõngata vahepesa	Cámara sin anillo de junta	Pesä, ilman kaularengasta	Chambre sans bague d'étanchéité	Θάλαμος χωρίς δακτύλιο λαιμού
4	Komplektne vahepesa	Cámara completa	Täydellinen pesä	Chambre complète	Θάλαμος πλήρης
4a	Laagriga vahepesa	Cámara con anillo cojinete	Pesä laakerirenkailla	Chambre avec bague de palier	Θάλαμος με δακτύλιο εδράνου
5a	Komplektne vahepesa	Cámara completa	Täydellinen pesä	Chambre complète	Θάλαμος πλήρης
6	Alus	Base	Jalkakappale	Pied de pompe	Βάση
6a	Lukustustihvt	Pasador tope	Pidätintappi, lukitustappi	Goupille d'arrêt	Πείρος συγκράτησης
6d	Aluse juhtplaat	Placa guía para base	Ohjauslevy jalustaan	Plaque pour pied de pompe	Πλάκα οδηγός γιά τη βάση
6g	Alumine laager	Anillo cojinete	Laakerirengas	Joint de palier	Δακτύλιος εδράνου
7	Ühendusmuhvi kate	Protector acoplamiento	Kytkimen suoja	Protège-accouplement	Προφυλακτήρας συνδέσμου
7a	Kruvi	Tornillo	Ruuvi	Vis	Κοχλίας
8	Komplektne ühendusmuhv	Acoplamiento completo	Täydellinen kytkin	Accouplement complet	Σύνδεσμος πλήρης
9	Kruvi	Tornillo	Ruuvi	Vis	Κοχλίας
10	Võlli tihvt	Pasador eje	Akselitappi	Goupille cylindrique	Πείρος άξονα
10a	Siduri osa	Semiacoplamiento	Kytkimen puolisko	Demi-accouplement	Ημισύνδεσμος
12	Flants (ovaal)	Brida (ovalada)	Laippa (soikea)	Bride (ovale)	Φλάντζα (οβάλ)
18	Õhutusventiil	Tornillo purga aire	Ilmausruuvi	Vis de purge	Τάπα εξαερισμού
19	Ääriku kork	Tapón tubería	Putkitulppa	Bouchon	Τάπα σωλήνα
21	Kork	Tapón	Tulppa	Bouchon	Τάπα
23	Kork	Tapón	Tulppa	Bouchon	Τάπα
25	Tühjendusava kork	Tapón purga	Tyhjennystulppa	Bouchon de vidange	Τάπα αποστράγγισης
26	Distantspolt	Espárrago sujeción	Pinnapultti	Goujon	Κοχλίες συγκράτησης
26a	Klamber	Tirante	Haka (säppi)	Tirant d'assemblage	Τιράντα
26b	Kruvi	Tornillo	Ruuvi	Vis	Κοχλίας
26c	Seib	Arandela	Aluslevy	Rondelle	Ροδέλα
28	Kruvi	Tornillo	Ruuvi	Vis	Κοχλίας
28a	Kruvi	Tornillo	Ruuvi	Vis	Κοχλίας
31	Kruvi	Tornillo	Ruuvi	Vis	Κοχλίας
32	Seib	Arandela	Aluslevy	Rondelle	Ροδέλα
32a	Seib	Arandela	Aluslevy	Rondelle	Ροδέλα
35	Kruvi	Tornillo	Ruuvi	Vis	Κοχλίας
36	Mutter	Tuerca	Mutteri	Ecrou	Περικόχλιο
36a	Mutter	Tuerca	Mutteri	Ecrou	Περικόχλιο
37	O-ring/tihend	Junta tórica/junta	O-rengas tiiviste	Joint/bague	Δακτύλιος-Ο/ παρέμβυσμα
38	O-ring	Junta tórica	O-rengas	Joint	Δακτύλιος-Ο
38a	O-ring	Junta tórica	O-rengas	Joint	Δακτύλιος-Ο
39	Tihend	Junta	Tiiviste	Bague	Τσιμούχα
44	Komplektne imiosa	Parte aspiración completa	Täydellinen sisäosa	Partie aspiration complète	Πλήρες εσωτερικό μέρος
44a	Sisendosa ülemine	Pieza de entrada, superior	Ylempi imuosa	Pièce d'aspiration supérieure	Τμήμα εισόδου, πάνω
44b	Sisendosa alumine	Pieza de entrada, inferior	Alempi imuosa	Pièce d'aspiration inférieure	Τμήμα εισόδου, κάτω
45	Tihendusrõngas	Anillo tope	Kaularengas	Bague d'étanchéité	Δακτύλιος λαιμού

Pos.	Designation				
	EE	ES	FI	FR	GR
45a	Tihendusrõngas	Anillo tope completo	Täydellinen kaularengas	Bague d'étanchéité complète	Δακτύλιος λαιμού πλήρης
47	Laager	Anillo cojinete	Laakerirengas	Bague de palier	Δακτύλιος εδράνου
47a	Juhikuga vahelaager	Cojinete con engranaje	Ohjainlaakeri	Bague de palier avec driver	Εδρανο με οδηγό
47b	Laager, pöörlev	Anillo cojinete giratorio	Laakerirengas, pyörivä	Bague de palier tournante	Δακτύλιος εδράνου στρεφόμενος
47c	Puks	Manguito	Holkki	Douille	Φωλιά
47d	Lukustusrõngas	Anillo cierre	Lukitusrengas	Bague de blocage	Δακτύλιος συγκράτησης
47e	Lukustusrõngas	Anillo cierre	Lukitusrengas	Bague de blocage	Δακτύλιος συγκράτησης
48	Lõhismutter	Tuerca casquillo cónico	Kartioholkki mutteri	Ecrou de cône de serrage	Περικόχλιο διαιρούμενου κώνου
49	Tööratas	Impulsor	Juoksupyörä	Roue	Πτερωτή
49a	Tööratas	Impulsor	Juoksupyörä	Roue	Πτερωτή
49b	Survepuks	Casquillo cónico	Kartioholkki	Cône de serrage	Διαιρούμενος κώνος
49c	Kulutusrõngas	Anillo desgaste	Kulutusrengas	Bague d'usure	Δακτύλιος φθοράς
50a	Surveosa/ ülemised juhtlabad	Pieza de descarga/ álabes guía superiores	Painepuoli / ylemmät johdesiivet	Pièce de refoulement/ aubes directrices supérieures	Τμήμα κατάθλιψης/πάνω οδηγά πτερύγια
51	Pumba võll	Eje bomba	Pumppuakseli	Arbre de pompe	Αξονας αντλίας
55	Kattesärk	Camisa exterior	Ulompi vaippa	Chemise	Εξωτερικό χιτώνιο
56	Alusplaat	Placa base	Jalustalevy	Plaque de base	Πλάκα βάσης
56a	Alusplaat	Placa base	Jalustalevy	Plaque de base	Πλάκα βάσης
56c	Kruvi	Tornillo	Ruuvi	Vis	Κοχλίας
56d	Seib	Arandela	Aluslevy	Rondelle	Ροδέλα
57	O-ring	Junta tórica	O-rengas	Joint	Δακτύλιος-Ο
58	Tihendi kandur	Soporte cierre	Tiivistekannatin	Toc d'entraînement	Φορέας στυπιοθλίπτη
58a	Kruvi	Tornillo	Ruuvi	Vis	Κοχλίας
60	Vedru	Muelle	Jousi	Ressort	Ελατήριο
61	Võllitihendi juhik	Guía de cierre	Tiivisteen vetotappi	Toc d'entrainement	Οδηγός στεγανοποιητικού
62	Lukustusrõngas	anillo de tope	Pysäytinrengas	Bague d'arrêt	Τερματικός δακτύλιος
64	Distantspuks	Casquillo espaciador	Väliholkki	Douille d'entretoise	Αποστάτης
64a	Distantspuks	Casquillo espaciador	Väliholkki	Douille d'entretoise	Αποστάτης
64b	Distantspuks	Casquillo espaciador	Väliholkki	Douille d'entretoise	Αποστάτης
64c	Soontega puks	Casquillo ranurado	Kiristin, rihlattu	Pièce de serrage	Στεφάνη με εγκοπές
64d	Distantspuks	Casquillo espaciador	Väliholkki	Douille entretoise	Αποστάτης
65	Tihendusrõnga klamber	Retén anillo junta	Kaulusrenkaan pidin	Support pour bague d'étanchéité	Στήριγμα δακτυλίου λαιμού
66	Seib	Arandela	Aluslevy	Rondelle	Ροδέλα
66a	Seib	Arandela	Aluslevy	Rondelle	Ροδέλα
66b	Vedruseib	Arandela cierre	Lukitusaluslevy	Rondelle de blocage	Συγκράτηση ροδέλας
67	Mutter/Kruvi	Tuerca/Tornillo	Mutteri/Ruuvi	Ecrou/Vis	Περικόχλιο/Κοχλίας
69	Distantspuks	Casquillo espaciador	Väliholkki	Douille entretoise	Αποστάτης
76	Pumba sildik	Juego placa identificación	Arvokilpisarja	Plaque d'identification	Σετ πινακίδας
76a	Neet	Remache	Niitti	Rivet	Πριτσίνι
77	Pumba kaas	Cubierta del cabezal de la bomba	Moottoriosan suoja	Couvercle hydraulique	Καπάκι κεφαλής αντλίας
100	O-ring	Junta tórica	O-rengas	Joint	Δακτύλιος-Ο
105	Võllitihend	Cierre	Akselitiiviste	Garniture mécanique	Στυπιοθλίπτης
201	Äärik	Brida	Laippa	Bride	Φλάντζα
203	Lukustusrõngas	Anillo cierre	Lukitusrengas	Bague de blocage	Δακτύλιος συγκράτησης

Pos.	Designation				
	HR	HU	IT	LT	LV
1	međuprirubnica	csatlakozó karima	Flangie adattatrici	Tarpinis flanšas	Pārejas savienotājelementa atloks
1a	međukomad	motortartó közdarab	Lanterna del motore	Variklio atrama	Motora paliktnis
2	glava crpke	szivattyúfej	Testa pompa	Siurblio galvutė	Sūkņa galva
3	gornja komora	felső kamra	Camera superiore	Viršutinė kamera	Kamera, augšējā
3a	komora bez rascijepljenog prstena	közkamra résgyűrű nélkül	Camera senza collarino	Kamera be kaklelio žiedo	Kamera bez gredzena ar frēzējumu
4	kompletna komora	komplett közkamra	Camera completa	Kamera	Nokomplektēta kamera
4a	komora s ležajnim prstenom	csapágyas közkamra	Camera con cuscinetto	Kamera su guolio žiedu	Kamera ar gultņa gredzenu
5a	kompletna komora	komplett közkamra	Camera completa	Kamera	Nokomplektēta kamera
6	nožni dio	talp	Base	Korpusas	Balstplātne
6a	zatik	rögzítő tüske	Molla di arresto	Fiksatorius	Atdures tapa
6d	vodilica za nožni dio	áramlásrendező tányér	Guida per basamento	Korpuso centravimo plokštelė	Balstplātnes vadotne
6g	prsten ležaja	csapágygyűrű	Cuscinetto	Atraminis guolis	Gultņa gredzens
7	zaštita spojke	tengelykapcsoló burkolat	Giunti di protezione	Movos apsauga	Savienotājuzmavas aizsargs
7a	vijak	csavar	Vite	Varžtas	Skrūve
8	spojka kompletna	komplett tengelykapcsoló	Giunto completo	Visa mova	Nokomplektēta savienotājuzmava
9	vijak	csavar	Vite	Varžtas	Skrūve
10	zatik vratila	tengelyretesz	Molla albero	Veleno kaištis	Vārsptas tapa
10a	Spojnica	Tengelykapcsolófél	Semigiunto	Movos pusė	Savienotājuzmavas daļa
12	Prirubnica (ovalna)	Karima (ovális)	Flangia (ovale)	Flanšas (ovalinis)	Atloks (ovāls)
18	odzračni vijak	légtelenítő csavar	Vite della ventola	Oro išleidimo angos varžtas	Atgaisošanas skrūve
19	čep	karima zárócsavar	Tappo	Vamzdžio kamštelis	Caurules noslēgs
21	čep	zárócsavar	Tappo	Kamštelis	Noslēgs
23	čep	zárócsavar	Tappo	Kamštelis	Noslēgs
25	čep za pražnjenje	ürítőcsavar	Tappo spurgo	Skysčio išleidimo kamštelis	Izliešanas noslēgs
26	sprežni vijak	összefogó rúd	Tiranti	Sąvarža	Enkurskrūve
26a	zatezna traka	összefogó pánt	Tirante	Juostinė apkaba	Siksna
26b	vijak	csavar	Vite	Varžtas	Skrūve
26c	podložna pločica	távtartó	Rondella	Poveržlė	Paplāksne
28	vijak	csavar	Vite	Varžtas	Skrūve
28a	vijak	csavar	Vite	Varžtas	Skrūve
31	vijak	csavar	Vite	Varžtas	Skrūve
32	podložna pločica	távtartó	Rondella	Poveržlė	Paplāksne
32a	podložna pločica	távtartó	Rondella	Poveržlė	Paplāksne
35	vijak	csavar	Vite	Varžtas	Skrūve
36	matica	csavaranya	Dado	Veržlė	Uzgrieznis
36a	matica	csavaranya	Dado	Veržlė	Uzgrieznis
37	O-prsten/brtva	O-gyűrű/tömítés	O ring/guranizione	Žiedas/tarpiklis	Apaļā šķērsgriezuma blīvgredzens / starplika
38	O-prsten	O-gyűrű	O ring	Žiedas	Apaļā šķērsgriezuma blīvgredzens
38a	O-prsten	O-gyűrű	O ring	Žiedas	Apaļā šķērsgriezuma blīvgredzens
39	Brtva	Tömítés	Guarnizione	Tarpiklis	Starplika
44	ulazni dio kompletan	komplett belső rész	Parte interna completa	Visa įsiurbimo dalis	Nokomplektēta ieplūdes daļa
44a	Gornji ulazni dio	Szívó oldal, felső	Parte superiore sezione di aspirazione	Viršutinė įvado dalis	Augšējā ieplūdes daļa

Pos.	Designation				
	HR	HU	IT	LT	LV
44b	Donji ulazni dio	Szívó oldal, alsó	Parte inferiore sezione di aspirazione	Apatinė įvado dalis	Apakšējā ieplūdes daļa
45	rascijepljeni prsten	résgyűrű	Collarino	Kakliuko žiedas	Gredzens ar frēzējumu
45a	rascijepljeni prsten kompletan	komplett résgyűrű	Colalrino completo	Visas kakliuko žiedas	Nokomplektēts gredzens ar frēzējumu
47	prsten ležaja	csapágygyűrű	Cuscinetto	Guolis	Gultņa gredzens
47a	prsten ležaja sa zahvatnikom	csapágy, megvezetővel	Cuscinetto con guida	Įstatoma guolis	Gultnis ar vadotni
47b	prsten ležaja, rotirajući	csapágygyűrű, forgórész	Cuscinetto rotante	Besisukantis guolis	Gultņa gredzens, rotējošs
47c	tuljak	persely	Boccola	Įvorė	Ieliktnis
47d	pridržni prsten	rögzítő gyűrű	Anello di arresto	Laikantysis žiedas	Sprostgredzens
47e	pridržni prsten	rögzítő gyűrű	Anello di arresto	Laikantysis žiedas	Sprostgredzens
48	matica za konusni prsten	szorítókúp anya	Dado bussola conica	Skelta kūginė veržlė	Šķelts konusveida uzgrieznis
49	rotor	járókerék	Girante	Darbaratis	Darbrats
49a	rotor	járókerék	Girante	Darbaratis	Darbrats
49b	konusni prsten	szorítókúp	Bussola conica	Skelta kūginė įvorė	Šķelts konuss
49c	potrošni prsten	kopógyűrű	Anello di usura	Dėvėjimosi žiedas	Nodiluma kompensators
50a	Ispusni dio/gornja krilca vodilice	Nyomó oldal/felső vezetőlapátok	Parti superiori sezione di mandata	Išvado dalis/viršutinės kreipiamosios mentės	Izplūdes daļa / augšējās virzošās lāpstiņas
51	vratilo crpke	szivattyú tengely	Albero pompa	Siurblio velenas	Sūkņa vārpsta
55	plašt	köpenycső	Camicia esterna	Išorinis cilindras	Uzmava
56	osnovna ploča	alaplap	Basamento	Korpuso pagrindas	Balstplātne
56a	osnovna ploča	alaplap	Basamento	Korpuso pagrindas	Balstplātne
56c	vijak	csavar	Vite	Varžtas	Skrūve
56d	podložna pločica	távtartó	Rondella	Poveržlė	Paplāksne
57	O-prsten	O-gyűrű	O ring	Žiedas	Apaļā šķērsgriezuma blīvgredzens
58	držač brtve	tömítés zárófedél	Porta tenuta	Riebokšlio laikiklis	Blīves turētājs
58a	vijak	csavar	Vite	Varžtas	Skrūve
60	opruga	rugó	Molla	Spyruoklė	Atspere
61	zahvatnik	vezető gyűrű	Guida guarnizione	Riebokšlio tarpiklis	Blīvējuma vadotne
62	zaustavni prsten	stopgyűrű	Anello di arresto	Fiksavimo žiedas	Aizsarggredzens
64	odstojnik	távtartó gyűrű	Tubo distanziale	Tarpinė įvorė	Atdalīšanas caurule
64a	odstojnik	távtartó gyűrű	Tubo distanziale	Tarpinė įvorė	Atdalīšanas caurule
64b	odstojnik	távtartó gyűrű	Tubo distanziale	Tarpinė įvorė	Atdalīšanas caurule
64c	zatezni komad, višeutorni	hornyos rögzítőgyűrű	Giunto	Apkaba, skelta	Skava, rievota
64d	odstojnik	távtartó gyűrű	Tubo distanziale	Tarpinė įvorė	Atdalīšanas caurule
65	držač za rascijepljeni prsten	résgyűrű rögzítő	Fermo per collarino	Kakliuko žiedo laikiklis	Gredzena ar frēzējumu vadplāksne
66	podložna pločica	távtartó	Rondella	Poveržlė	Paplāksne
66a	podložna pločica	távtartó	Rondella	Poveržlė	Paplāksne
66b	sigurnosna pločica	rögzítő alátét	Blocco per rondella	Fiksuojamoji poveržlė	Sprostpaplāksne
67	matica/vijak	csavaranya/csavar	Dado/Vite	Fiksuojamoji veržlė/ Varžtas	Uzgrieznis/skrūve
69	odstojnik	távtartó gyűrű	Tubo distanziale	Tarpinė įvorė	Atdalīšanas caurule
76	natpisne pločice	adattábla készlet	Targhetta	Vardinė plokštelė	Datu plāksnīšu komplekts
76a	Zakovica	Szegecs	Rivetto	Kniedė	Kniede
77	Poklopac glave crpke	Szivattyú fej fedél	Copertura testa pompa	Siurblio galvutės gaubtas	Sūkņa galvas pārsegs
100	O-prsten	O-gyűrű	O ring	Žiedas	Apaļā šķērsgriezuma blīvgredzens
105	brtva vratila	tengelytömítés	Tenuta meccanica	Riebokšlis	Vārpstas blīve
201	prirubnica	karima	Flangia	Flanšas	Atloks
203	pridržni prsten	rögzítő gyűrű	Blocca flangia	Laikantysis žiedas	Sprostgredzens

Pos.	Designation				
	NL	PL	PT	RO	RS
1	Adapterflens	Kołnierz przejściowy	Flange do adaptador	Flanşa de adaptare	Prirubnica podešavanja
1a	Lantaarnstuk	Podstawa silnika	Adaptador do motor	Scaunul motorului	Oslonac motora
2	Pompkop	Głowica pompy	Cabeça da bomba	Capul pompei	Glava pumpe
3	Bovenste kamer	Komora górna	Câmara superior	Camera superioară	Gornje kućište
3a	Kamer zonder spaltring	Komora bez pierścienia bieżnego	Câmara sem aro	Camera fără inel de uzură	Kućište bez oslonog prstena
4	Kamer compleet	Komora, kompletna	Câmara completa	Camera completă	Kompletno kućište
4a	Kamer met lager	Komora z pierścieniem oporowym łożyska	Câmara com casquilho	Camera cu lagăr	Kućište sa ležišnim prstenom
5a	Kamer compleet	Komora, kompletna	Câmara completa	Camera completă	Kompletno kućište
6	Voetstuk	Podstawa	Base	Baza pompei	Element oslonca
6a	Anti rotatie stift	Kołek ustalający	Pino	Ştift de blocare	Zaustavni štift
6d	Geleideplaat voor voetstuk	Dolna płyta kierująca	Prato-guia da base	Placa de ghidaj pentru baza pompei	Vodeća ploča osnove
6g	Lager	Pierścień oporowy łożyska	Casquilho	Lagăr	Prsten kugličnog ležaja
7	Koppeling beschermer	Osłona sprzęgła	Protecção do acoplamento	Apărătoare de protecţie	Zaštita spojnice
7a	Schroef	Śruba	Parafuso	Şurub	Zavrtanj
8	Koppeling compleet	Sprzęgło, komplet	Acoplamento completo	Cuplaj complet	Komplet spojnice
9	Schroef	Śruba	Parafuso	Şurub	Zavrtanj
10	Stift	Klin mocujący wału	Pino do veio	Ştiftul axului	Cilindrični štift
10a	Koppelingshelft	Połówka sprzęgła	Semi-acoplamento	Semicuplă	Polutka spojnice
12	Flens (ovaal)	Kołnierz (owalny)	Flange (oval)	Flanşă (ovală)	Prirubnica (ovalna)
18	Ontluchtings-schroef	Śruba odpowietrzająca	Parafuso de purga	Şurub de aerisire	Zavrtanj za odzračivanje
19	Plug	Korek	Bujão da tubagem	Dop filetat pentru ţeavă	Žep cevi
21	Plug	Korek	Bujão da tubagem	Dop	Čep
23	Plug	Korek	Bujão da tubagem	Dop	Čep
25	Aftapplug	Korek spustowy	Bujão de drenagem	Dop (buşon) de golire	Drenažni čep
26	Trekstag	Śruba ściągająca	Perno	Prezoane	Osnovni zavrtanj
26a	Spanband	Ściąg	Tirante	Clemă	Osigurač
26b	Schroef	Śruba	Parafuso	Şurub	Zavrtanj
26c	Sluitring	Podkładka	Anilha	Şaibă	Podloška
28	Schroef	Śruba	Parafuso	Şurub	Zavrtanj
28a	Schroef	Śruba	Parafuso	Şurub	Zavrtanj
31	Schroef	Śruba	Parafuso	Şurub	Zavrtanj
32	Sluitring	Podkładka	Anilha	Şaibă	Podloška
32a	Sluitring	Podkładka	Anilha	Şaibă	Podloška
35	Schroef	Śruba	Parafuso	Şurub	Zavrtanj
36	Moer	Nakrętka	Fêmea	Piuliţă	Matica
36a	Moer	Nakrętka	Fêmea	Piuliţă	Matica
37	O-ring pakking	Pierścień O-ring/uszczelka	O-ring/junta	O-ring/garnitură	O-zaptivni prsten
38	O-ring	Pierścień O-ring	O-ring	O-ring	O-prsten
38a	O-ring	Pierścień O-ring	O-ring	O-ring	O-prsten
39	Pakking	Uszczelka	Junta	Garnitură	Zaptivač
44	Inlaatdeel compleet	Komora wlotowa	Aspiração completa	Parte de intrare completă	Komplet ulazni deo
44a	Bovenste inlaatgedeelte	Część wlotowa (górna)	Peça de entrada, superior	Parte aspiraţie superioară	Gornji deo ulaza
44b	Onderste inlaatgedeelte	Część wlotowa (dolna)	Peça de entrada, inferior	Parte aspiraţie inferioară	Donji deo ulaza
45	Spaltring	Pierścień bieżny	Aro	Inel de etanşare	Osloni prsten
45a	Spaltring compleet	Pierścień bieżny, obrotowy	Aro completo	Inel de etanşare complet	Komplet oslonog prstena
47	Lager	Pierścień oporowy łożyska	Casquilho	Lagăr	Prsten kugličnog ležaja

Pos.	Designation				
	NL	PL	PT	RO	RS
47a	Lager met meenemer	Łożysko z zabierakiem	Casquilho com guia	Lagăr cu cuzinet	Kuglični ležaj sa prstenom
47b	Lager roterend	Pierścień łożyskowy	Casquilho rotativo	Lagăr rotativ	Kuglični ležaj rotirajući
47c	Bus	Tulejka	Manga	Bucşa	Čaura
47d	Borgring	Pierścień mocujący	Retentor	Inel de blocare	Noseći prsten
47e	Borgring	Pierścień mocujący	Retentor	Inel de blocare	Noseći prsten
48	Klembusmoer	Nakrętka tulei stożkowej	Fêmea cónica	Piuliţă cu strângere pe con	Matica konusne čaure
49	Waaier	Wirnik	Impulsor	Rotor	Obrtno kolo pumpe
49a	Waaier	Wirnik	Impulsor	Rotor	Obrtno kolo pumpe
49b	Klembus	Tuleja stożkowa	Casquilho cónico	Con de strângere	Konusna čaura
49c	Slijtring	Pierścień bieżny	Aro de desgaste	Inel de uzură	Habajući prsten
50a	Uitlaatgedeelte/ bovenste geleideschoep	Część wylotowa/górne krawędzie w korpusie	Peça de descarga/pás guia da parte superior	Parte refulare	Potisni deo/Gornje usmerno kolo
51	Pompas	Wał pompy	Veio	Axul pompei	Osovina pumpe
55	Mantel	Płaszcz	Camisa exterior	Manta exterioară	Spoljna zaštita
56	Voetplaat	Podstawa	Base	Placa de bază	Osnovna ploča
56a	Voetplaat	Podstawa	Base	Placa de bază	Osnovna ploča
56c	Schroef	Śruba	Parafuso	Şurub	Zavrtanj
56d	Sluitring	Podkładka	Anilha	Şaibă	Podloška
57	O-ring	Pierścień O-ring	O-ring	O-ring	O-prsten
58	Houder voor asafdichting	Mocowanie uszczelnienia	Suporte do empanque	Suport pentru etanşare	Kućište zaptivanja osovine
58a	Schroef	Śruba	Parafuso	Şurub	Zavrtanj
60	Veer	Sprężyna	Mola	Arc	Opruga
61	Meenemer	Zabierak	Batente do espaçador	Distanţier pentru etanşarea mecanică	Pogonaš zaptivaca
62	Stopring	Pierścień stopowy	Mola de encosto	Semering	Zaustavni prsten
64	Afstandsbus	Tulejka dystansowa	Espaçador	Tub distanţier	Odstojna čaura
64a	Afstandsbus	Tulejka dystansowa	Espaçador	Tub distanţier	Odstojna čaura
64b	Afstandsbus	Tulejka dystansowa	Espaçador	Tub distanţier	Odstojna čaura
64c	Spanstuk, splined	Tulejka wielowypustowa	Casquilho escatelado	Suport canelat	Osigurač saumetkom
64d	Afstandsbus	Tulejka dystansowa	Espaçador	Tub distanţier	Odstojna čaura
65	Houder voor spaltring	Tulejka dystansowa	Retentor do aro	Suport pentru inelul de etan$_s$are	Držač oslonog prstena
66	Sluitring	Podkładka	Anilha	Şaibă	Podloška
66a	Sluitring	Podkładka	Anilha	Şaibă	Podloška
66b	Borgring	Podkładka zabezpieczająca	Anilha retentora	Şaibă de blocare	Osiguravajuća podloška
67	Moer/Schroef	Nakrętka/Śruba	Fêmea/Parafuso	Piuliţă/Şurub	Matica/Zavrtanj
69	Afstandsbus	Tulejka dystansowa	Espaçador	Tub distanţier	Odstojna čaura
76	Typeplaat set	Tabliczka znamionowa	Chapa de identificação	Eticheta	Pločica označavanja
76a	Klinknagel	Nit	Rebite	Nit	Zakivak
77	Deksel pompkop	Pokrywa głowicy pompy	Cobertura da cabeça da bomba	Acoperire capul pompei	Poklopac glave pumpe
100	O-ring	Pierścień O-ring	O-ring	O-ring	O-prsten
105	Asafdichting	Uszczelnienie wału	Empanque mecânico	Etanşare mecanică	Zaptivač osovine
201	Flens	Kołnierz	Flange	Flanşa	Prirubnica
203	Borgring	Pierścień mocujący	Anel retentor	Inel de blocare	Osloni prsten

Pos.	Designation			
	RU	SE	SI	SK
1	Промежуточный фланец	Mellanfläns	Vmesna prirobnica	Medzipríruba
1a	Фонарь	Mellanstycke	Konzola motorja	Lucerna
2	Головная часть насоса	Toppstycke	Glava črpalke	Horné teleso čerpadla
3	Верхняя камера	Kammare, övre	Najvišja stopnja	Horná komora
3a	Камера без щелевого уплотнения	Mallankammare utan tätningsring	Stopnja brez režnega obroča	Komora bez rozperného krúžka
4	Камера в сборе	Kammare komplett	Stopnja komplet	Kompletná komora
4a	Камера с подшипниковым кольцом	Mellankammare med lager	Stopnja z ležajnim obročem	Komora s ložiskovým krúžkom
5a	Камера в сборе	Kammare komplett	Stopnja komplet	Kompletná komora
6	Основание	Fotstycke	Podnožje črpalke	Spodné teleso čerpadla
6a	Стопорный штифт	Stoppsprint	Zaporni zatič	Uzáverný kolík
6d	Направляющая плита для опоры/лапы	Styrplatta till fotstycke	Vodilna plošča za podnožje črpalke	Vodiaca platňa pre spodné teleso
6g	Подшипниковое кольцо	Bottenlager	Ležajni obroč	Ložiskový krúžok
7	Защитный кожух	Kopplingsskärm	Zaščitni pokrov	Ochranný kryt spojky
7a	Винт	Skruv	Vijak	Skrutka
8	Муфта в сборе	Koppling komplett	Sklopka komplet	Kompletná spojka
9	Винт	Skruv	Vijak	Skrutka
10	Цилиндрический штифт	Cylinderstift	Cilindrični zatič	Zylindrický kolík
10a	Полумуфта	Kopplingshalva	Polovica sklopke	Polspojka
12	Овальный фланец	Fläns (oval)	Prirobnica (ovalna)	Príruba (oválna)
18	Винт вентиляционного отверстия	Luftskruv	Odzračevalni vijak	Odvzdušňovacia skrutka
19	Заглушка	Rörpropp	Čep	Zátka
21	Заглушка	Propp	Čep	Zátka
23	Заглушка	Propp	Čep	Zátka
25	Заглушка сливного отверстия	**Tömningspropp**	Izpraznjevalni čep	Vypúšťacia skrutka
26	Стяжной болт	Stödbult	pritrjevalni vijak	Stahovacie skrutky
26a	Стяжная лента	Spännband	Zatezni pas	Stahovacie spony
26b	Винт	Skruv	Vijak	Skrutka
26c	Шайба	Bricka	Podložka	Podložka
28	Винт	Skruv	Vijak	Skrutka
28a	Винт	Skruv	Vijak	Skrutka
31	Śruba	Skruv	Vijak	Skrutka
32	Шайба	Bricka	Podložka	Podložka
32a	Шайба	Bricka	Podložka	Podložka
35	Винт	Skruv	Vijak	Skrutka
36	Гайка	Mutter	Matica	Matica
36a	Гайка	Mutter	Matica	Matica
37	Уплотнительное кольцо круглого сечения/прокладка	O-ring/packning	O-tesnilo/ tesnilo	O-krúžok/tesnenie
38	Уплотнительное кольцо круглого сечения	O-ring	O-tesnilo	O-krúžok
38a	Уплотнительное кольцо круглого сечения	O-ring	O-tesnilo	O-krúžok
39	Прокладка	Packning	Tesnilo	Tesnenie
44	Деталь всасывающей полости в сборе	Inloppsdel komplett	Vstopni del komplet	Vtoková časť komplet
44a	Впускная часть, верхняя	Övre inloppsdel	Zgornji dovodni del	Horný prívod čerpadla
44b	Впускная часть, нижняя	Undre inloppsdel	Spodnji dovodni del	Dolný prívod čerpadla
45	Щелевое уплотнение	Tätningsring	Režni obroč	Tesniaci krúžok
45a	Щелевое уплотнение в сборе	Tätningsring, komplett	Režni obroč komplet	Tesniaci krúžok komplet
47	Кольцо подшипника	Lager	Ležajni obroč	Ložiskový krúžok
47a	Подшипник с "поводком"	Lager med medbringare	Ležaj z nosilcem	Ložisko s unášačom

Pos.	Designation			
	RU	SE	SI	SK
47b	Вращающееся кольцо подшипника	Lagerring, roterande	Ležajni obroč, rotirajoč	Ložiskový krúžok, rotujúci
47c	Втулка	Bussning	Puša	Medzikrú-žok/vložka
47d	Стопорное кольцо	Låsbricka	Držalni obroč	Držný krúžok
47e	Стопорное кольцо	Låsbricka	Držalni obroč	Držný krúžok
48	Гайка для зажимной втулки	Mutter för klämbussning	Matica za pritrdilno pušo	Matica so sťahovacou vložkou
49	Рабочее колесо	Pumphjul	Rotor črpalke	Obežné koleso
49a	Рабочее колесо	Pumphjul	Rotor črpalke	Obežné koleso
49b	Разжимная втулка	Klämbussning	Pritrdilna puša	Sťahovacia vložka
49c	Антифрикционное кольцо	Slitring	Obrabni obroč	Uzatvárací krúžok
50a	Выпускная часть/верхние направляющие лопатки	Utloppsdel/övre ledskenor	Tlačni del/zgornjega voda	Výpust/vrchné vodiace lopatky
51	Вал насоса	Pumpaxel	Os črpalke	Hriadeľ
55	Кожух	Mantel	Plašč	Plášť
56	Плита-основание	Fotstycke	Osnovna plošča	Základová platňa
56a	Плита-основание	Fotstycke	Osnovna plošča	Základová platňa
56c	Śruba	Skruv	Vijak	Skrutka
56d	Шайба	Bricka	Podložka	Podložka
57	Уплотнительное кольцо круглого сечения	O-ring	O-tesnilo	O-krúžok
58	Базовая деталь уплотнения вала	Hållare för axeltätning	Držalo drsnega tesnila	Držiak upchávky hriadeľa
58a	Винт	Skruv	Vijak	Skrutka
60	Пружина	Fjäder	Vzmet	Spružina
61	Пружина торцового уплотнения	Medbringare	Gonilo tesnila	Unášač
62	Стопорное кольцо	Stoppring	Stop prstan	Dorazový krúžok
64	Промежуточная втулка	Avståndsbussning	Distančnik	Dištančné puzdro
64a	Промежуточная втулка	Avståndsbussning	Distančnik	Dištančná puzdro
64b	Промежуточная втулка	Avståndsbussning	Distančnik	Dištančná puzdro
64c	Шлицевая зажимная гильза	Avståndsbussning (spline)	Natezni kos, utorni	Španovací kus, drážkovaný
64d	Промежуточная втулка	Avståndsbussning	Distančnik	Dištančné puzdro
65	Базовая деталь щелевого уплотнения	Hållare för tätningsring	Držalo režnega obroča	Držiak pre tesniaci krúžok
66	Шайба	Bricka	Podložka	Podložka
66a	Шайба	Bricka	Podložka	Podložka
66b	Стопорная шайба	Låsbricka	Varnostna podložka	Zaisťovací plech
67	Гайка/Śruba	Mutter/Skruv	Matica/Vijak	Matica/Skrutka
69	Промежуточная втулка	Avståndsbussning	Distančnik	Dištančné puzdro
76	Фирменная табличка с техническими параметрами в сборе	Typskylt	Tipska ploščica	Štítok čerpadla
76a	Заклепка	Nit	Zakovica	Nit
77	Крышка головной части насоса	Kåpa, pumphuvud	Pokrov glave črpalke	Kryt čerpadla
100	Уплотнительное кольцо круглого сечения	O-ring	O-tesnilo	O-krúžok
105	Уплотнение вала	Axeltätning	Drsno tesnilo	Upchávka hriadeľa
201	Фланец	Fläns	Prirobnica	Príruba
203	Стопорное кольцо	Låsbricka	Držalni obroč	Tesniaci krúžok/tesnenie

Pos.	Designation			
	TR	UA	KZ	CN
1	Küçültme flanşı	Перехідник	Аралық фланец	接头法兰
1a	Motor oturağı	Опора електродвигуна	Шам	电机座
2	Pompa başı	Головна частина насоса	Сорғының жоғарғы бөлігі	泵头
3	Bölme, üst	Камера, верх	Жоғарғы камера	腔体，顶部
3a	Boyun halkasız bölme	Камера без ущільнювального кільця	Саңылаусыз тығыздау камерасы	颈环
4	Komple bölme	Набір камер	Жинақталған камера	完整腔体
4a	Yatak halkalı bölme	Камера з кільцем підшипника	Подшипник сақинасы бар камера	带轴承环的腔体
5a	Komple bölme	Набір камер	Жинақталған камера	完整腔体
6	Taban	Основа	Табаны	底座
6a	Stop pimi	Штифт зупинки	Ұстағыш штифт	止动销
6d	Taban için kılavuz plakası	Направляюча плита для основи	Тіреулердің/аяқтардың бағыттағыш плитасы	基架导板
6g	Yatak halkası	Кільце опори	Подшипник сақина	轴承环
7	Kaplin koruması	Захисний кожух	Қорғағыш қаптама	联轴器护罩
7a	Vida	Гвинт	Винт	螺丝
8	Komple kaplin	Муфта в сборі	Жинақталған муфта	联轴器套件
9	Vida	Гвинт	Винт	螺丝
10	Şaft pimi	Штифт валу	Цилиндрлі штифт	轴销
10a	Kaplin yarısı	Напівмуфта	Жартылай муфта	联轴器
12	Flanş (oval)	Фланець (овальний)	Фланец (сопақ)	法兰（椭圆）
18	Hava tahliye vidası	Гвинт вентиляційного клапана	Желдету саңылауының винті	排气螺丝
19	Boru tapası	Трубна заглушка	Тығын	管塞
21	Tapa	Кабельний ввід	Тығын	插头
23	Tapa	Кабельний ввід	Тығын	插头
25	Tahliye tapası	Пробка дренажного отвору	Ағызу саңылауының тығыны	排水螺栓
26	Germe civatası, saplama	Шпилька	Тарту бұрандасы	拉杆螺拴
26a	Şerit	Стрічка	Тартқыш бау	拉紧板条
26b	Vida	Гвинт	Винт	螺丝
26c	Pul	Шайба	Шайба	垫圈
28	Vida	Гвинт	Винт	螺丝
28a	Vida	Гвинт	Винт	螺丝
31	Vida	Гвинт	Винт	螺丝
32	Pul	Шайба	Шайба	垫圈
32a	Pul	Шайба	Шайба	垫圈
35	Vida	Гвинт	Винт	螺丝
36	Somun	Гайка	Гайка	螺母
36a	Somun	Гайка	Гайка	螺母
37	O-ring/conta	Ущільнювальне кільце/прокладка	Дөңгелек қималы тығыздағыш сақина/аралық қабат	O型圈/垫圈
38	O-ring	Ущільнювальне кільце	Дөңгелек қималы тығыздағыш сақина	O型圈
38a	O-ring	Ущільнювальне кільце	Дөңгелек қималы тығыздағыш сақина	O型圈
39	Conta	Прокладка	Аралық қабат	垫圈
44	Komple emme kısmı	Всмоктуюча частина повна	Жиналған сорғыш қуыстағы бөлшек	进口部分
44a	Giriş kısmı üst	Верхня частина впуску	Жоғарғы кіріс бөлік	上进口部件
44b	Giriş kısmı alt	Нижня частина впуску	Төменгі кіріс бөлік	下进口部件
45	Boyun halkası	Ущільнювальне кільце	Саңылау тығыздағыш	颈环
45a	Komple boyun halkası	Ущільнювальне кільце повне	Жинақталған саңылау тығыздағыш	颈环成品
47	Yatak halkası	Кільце опори	Подшипник сақинасы	轴承环
47a	Sürücülü yatak halkası	Опора з двигуном	"Жібі бар" подшипник	带驱动器的轴承
47b	Yatak halkası, döner	Кільце опори, що обертається	Подшипниктің айналғыш сақинасы	轴承动环
47c	Burç	Втулка	Втулка	衬套

Pos.	Designation			
	TR	UA	KZ	CN
47d	Tespit halkası	Стопорне кільце	Ұстағыш сақина	固定环
47e	Tespit halkası	Стопорне кільце	Ұстағыш сақина	固定环
48	Yarık koni somunu	Гайка для розтискної втулки	Қысқыш втулка гайкасы	花键圆锥螺母
49	Kanat	Робоче колесо	Жұмыс дөңгелегі	叶轮
49a	Kanat	Робоче колесо	Жұмыс дөңгелегі	叶轮
49b	Kapalı somun	Розтискна втулка	Босату втулкасы	花键圆锥
49c	Aşınma halkası	Кільце щілинного ущільнення	Антифрикциялық сақина	耐磨环
50a	Basma kısmı/üst kılavuz kanatlar	Випуск/верхній блок направляючих лопаток	Шығару бөлігі/жоғарғы бағыттағыш қалақтар	出口部件/顶部导流叶片
51	Mil	Вал насоса	Сорғы білігі	泵轴
55	Dış ceket	Зовнішня втулка	Қаптама	套筒
56	Şase	Плита-основа	Астыңғы плита	底板
56a	Şase	Плита-основа	Астыңғы плита	底板
56c	Vida	Гвинт	Винт	螺丝
56d	Pul	Шайба	Шайба	垫圈
57	O-ring	Ущільнювальне кільце	Дөңгелек қималы тығыздағыш сақина	O型圈
58	Salmastra taşıyıcı	Тримач ущільнення	Білік тығыздағышының негізгі бөлшегі	机封压盖
58a	Vida	Гвинт	Винт	螺丝
60	Yay	Пружина	Серіппе	弹簧
61	Salmastra yuvası	Оправлення ущільнення	Бүйірлік тығыздау серіппесі	密封驱动
62	Kitleme somunu	Стопорне кільце	Ұстағыш сақина	止动环
64	Ayar ara parçası	Втулка	Аралық втулка	隔管
64a	Ayar ara parçası	Втулка	Аралық втулка	隔管
64b	Ayar ara parçası	Втулка	Аралық втулка	隔管
64c	Kelepçe boru	Шлицевий хомут	Тісті қысқыш гильза	花键夹
64d	Ayar ara parçası	Втулка	Аралық втулка	隔管
65	Boğaz aşınma halkası	Фіксатор ущільнювального кільця	Саңылау тығыздағышының негізгі бөлшегі	颈环挡圈
66	Pul	Шайба	Шайба	垫圈
66a	Pul	Шайба	Шайба	垫圈
66b	Kitleme pulu	Стопорна шайба	Ұстағыш шайба	锁紧垫圈
67	Somun/Vida	Гайка/гвинт	Гайка/ винт	螺母/螺丝
76a	Perçin	Заклепка	Тойтарма шеге	隔管
77	Pompa kafası kapağı	Кришка головної частини насоса	Сорғы басының қақпағы	铭牌套件
69	Ayar ara parçası	Втулка	Аралық втулка	铆钉
76	Etiket	Шилдик насоса	Жинақталған техникалық параметрлері бар фирмалық тақташа	泵顶盖
100	O-ring	Ущільнювальне кільце	Дөңгелек қималы тығыздағыш сақина	O型圈
105	Mekanik salmastra	Торцеве ущільнення валу	Білік тығыздағышы	轴封
201	Flanş	Фланець	Фланец	法兰
203	Tutucu halka	Стопорне кільце	Ұстағыш сақина	固定环

Pos.	Designation				
	ID	MK	NO	IS	AR
1	Flensa adaptor	Адаптерска прирабница	Adapterflens	Millistykkisflans	الشـــفة المهيئـــة
1a	Wadah motor	Подлога за моторот	Motorbukk	Mótorstallur	كرســي المحـرك
2	Head pompa	Глава на пумпата	Pumpehode	Dæluhaus	رأس المضـــخة
3	Chamber, atas	Комора, горна	Kammer, topp	Hólf, efsti hluti	الحجـــرة، العليـــا
3a	Chamber tanpa ring leher	Комора без вратен прстен	Kammer uten kragering	Hólf án hálshrings	الحجـرة دون وجـود الحلقـة العنقيـــة
4	Chamber lengkap	Целосна комора	Kammer, komplett	Allt hólfið	الحجـرة بالكامـل
4a	Chamber dengan ring bantalan motor	Комора со прстен на лежиштето	Kammer med lagerring	Hólf með leguvörn	الحجرة مـع وجـود حلقـة كرســي التحميـــل
5a	Chamber lengkap	Целосна комора	Kammer, komplett	Allt hólfið	الحجـرة بالكامـل
6	Alas	Подножје	Fotstykke	Botn	القاعـدة
6a	Pin penghenti	Игличка за запирање	Stoppstift	Festipinni	مسـمار الإيقـاف
6d	Pelat pemandu untuk alas	Основа-водилка за подножјето	Føringsplate for fotstykke	Stýriplata fyrir botn	اللـوح التوجيهـي الخـاص بالقاعـدة
6g	Ring bantalan poros	Прстен на лежиштето	Lagerring	Leguvörn	حلقـة كرســي التحميـل
7	Pemandu sambungan	Заштитник на спојницата	Koblingsvern	Tengjahlíf	واقـي القارنـة
7a	Sekrup	Завртка	Skrue	Skrúfa	مسـمار
8	Sambungan selesai	Целосна спојка	Kobling, komplett	Tengingu lokið	القارنـة بالكامـل
9	Sekrup	Завртка	Skrue	Skrúfa	مسـمار
10	Pin poros	Игличка на основата	Akselstift	Skaftpinni	مسـمار العمـود
10a	Sambungan setengah	Полуспојка	Koblingshalvdel	Skrúftengi	نصـف القارنـة
12	Flensa (oval)	Прирабница (овална)	Flens (oval)	Flans (sporöskjulaga)	الشـفة (البيضـاوية)
18	Sekrup lubang udara	Завртка за обезвоздушување	Lufteskrue	Loftunarskrá	بـرغي تنفيـس الهـواء
19	Sumbat pipa	Цевен чеп	Rørplugg	Rörtappi	طـرف الأنبـوب
21	Sumbat	Приклучок	Plugg	Tappi	السـدادة
23	Sumbat	Приклучок	Plugg	Tappi	السـدادة
25	Sumbat pengurasan	Чеп за празнење	Tappeplugg	Botntappi	سـدادة التفـريغ
26	But penguat	Спојка	Ankerbolt	Stagbolti	مسـمار التثبيـت
26a	Pengikat	Ремен	Stropp	Ól	الحـزام
26b	Sekrup	Завртка	Skrue	Skrúfa	مسـمار
26c	Cincin	Подлошка	Skive	Skinna	حلقـة إحكـام الـربط
28	Sekrup	Завртка	Skrue	Skrúfa	مسـمار
28a	Sekrup	Завртка	Skrue	Skrúfa	مسـمار
31	Sekrup	Завртка	Skrue	Skrúfa	مسـمار
32	Cincin	Подлошка	Skive	Skinna	حلقـة إحكـام الـربط
32a	Cincin	Подлошка	Skive	Skinna	حلقـة إحكـام الـربط
35	Sekrup	Завртка	Skrue	Skrúfa	مسـمار
36	Mur	Навртка	Mutter	Ró	صـمولة
36a	Mur	Навртка	Mutter	Ró	صـمولة
37	O-ring/gasket	О-прстен/дихтунг	O-ring/pakning	O-hringur/pakkning	حلقـة دائرية/الحشـية
38	O-ring	О-прстен	O-ring	O-hringur	حلقـة دائريـة

Pos.	Designation				
	ID	MK	NO	IS	AR
38a	O-ring	О-прстен	O-ring	O-hringur	حلقــة دائريــة
39	Gasket	Дихтунг	Pakning	Pakkning	حشــية
44	Komponen saluran hisap selesai	Целосен доводен дел	Innløpsdel, komplett	Allur inntakshluti	جــزء المــدخل بالكامــل
44a	Komponen saluran hisap bagian atas	Горен доводен дел	Innløpsdel, øvre	Efri hluti inntakshluta	جــزء المــدخل العلــوي
44b	Komponen saluran hisap bagian bawah	Долен доводен дел	Innløpsdel, nedre	Neðri hluti inntakshluta	جــزء المــدخل الســفلي
45	Ring leher	Вратен прстен	Kragering	Hálshringur	الحلقـــة العنقيـــة
45a	Ring leher selesai	Целосен вратен прстен	Kragering, komplett	Allur hálshringurinn	الحلقـــة العنقيـــة بالكامـــل
47	Ring bantalan poros	Прстен на лежиштето	Lagerring	Leguvörn	حلقــة كرســي التحميــل
47a	Bantalan poros dengan pengendali	Лежиште со управувач	Lager med drev	Lega með drifi	كرســي تحميــل مــزودة بناقــل حركــة
47b	Ring bantalan poros, berputar	Прстен на лежиштето, ротирачки	Lagerring, roterende	Leguvörn, snúanleg	حلقــة كرســي التحميــل، دوارة
47c	Selongsong	Славина	Hylse	Hólkur	جليــة
47d	Ring penahan	Потпорен прстен	Sikringsring	Festihringur	حلقـــة تثبيـــت
47e	Ring penahan	Потпорен прстен	Sikringsring	Festihringur	حلقـــة تثبيـــت
48	Mur split cone	Наврткa на конус-разделник	Konisk mutter	Rofin keiluró	صـــمولة المخـــروط ذي الفتحـــة
49	Impeller	Ротор	Pumpehjul	Dæluhjól	المروحــة
49a	Impeller	Ротор	Pumpehjul	Dæluhjól	المروحــة
49b	Split cone	Конус-разделник	Del konus	Rofin keila	المخـــروط ذو الفتحـــة
49c	Wear ring	Прстенеста заптивка	Slitering	Slithringur	حلقـــة التآكـــل
50a	Bagian pelepasan/bilah pemandu atas	Одводен дел/горни лопатки-водилки	Utløpsdel / øvre lameller	Úttakshluti /stýriblöð	جــزء المخــرج/الأذرع العلويــة التوجيهيـــة
51	Poros pompa	Осовина на пумпата	Pumpeaksel	Dæluskaft	عمــود إدارة المضــخة
55	Lengan	Ракав	Hylse	Slíf	الجليـــة
56	Alas/penampang pompa	Подножна плоча	Fotplate	Undirstöðuplata	لوحــة القاعــدة
56a	Alas/penampang pompa	Подножна плоча	Fotplate	Undirstöðuplata	لوحــة القاعــدة
56c	Sekrup	Завртка	Skrue	Skrúfa	مسمار
56d	Cincin	Подлошка	Skive	Skinna	حلقــة إحكــام الــربط
57	O-ring	О-прстен	O-ring	O-hringur	حلقــة دائريــة
58	Seal carrier	Носач на спојот	Tetningsbærer	Umgjörð um öxulþétti	حامــل مــانع التســرب
58a	Sekrup	Завртка	Skrue	Skrúfa	مسمار
60	Pegas	Пружина	Fjær	Gormur	زنـــبرك
61	Pengendali siil	Управувач на спојот	Tetningsbærer	Flansi	ناقــل الحركــة الخــاص بمــانع التســـرب
62	Ring penghenti	Прстен за запирање	Stoppring	Stöðvunarhringur	حلقــة الإيقــاف
64	Pipa pengatur jarak	Цевка за растојание	Avstandsrør	Stöðuhólkur	أنبـــوب المباعـــدة
64a	Pipa pengatur jarak	Цевка за растојание	Avstandsrør	Stöðuhólkur	أنبـــوب المباعـــدة
64b	Pipa pengatur jarak	Цевка за растојание	Avstandsrør	Stöðuhólkur	أنبـــوب المباعـــدة
64c	Klem, terbentang	Клема, со жлебно вратило	Klemme, riflet	Klemma, klofin	مشــبك، مخــدد
64d	Pipa pengatur jarak	Цевка за растојание	Avstandsrør	Stöðuhólkur	أنبـــوب المباعـــدة
65	Penahan ring leher	Потпора на вратен прстен	Krageringsikring	Festing fyrir hálshring	مثبـــت الحلقـــة العنقيـــة

Pos.	Designation				
	ID	MK	NO	IS	AR
66	Cincin	Подлошка	Skive	Skinna	حلقــة إحكــام الــربط
66a	Cincin	Подлошка	Skive	Skinna	حلقــة إحكــام الــربط
66b	Cincin pengunci	Подлошка за блокирање	Låseskive	Lásskinna	حلقــة إحكــام الــربط الخاصــة بالقفـــــل
67	Mur/sekrup	Навртка/завртка	Mutter/skrue	Rró/skrúfa	الصمولة/المســـــمار
76a	Pipa pengatur jarak	Цевка за растојание	Avstandsrør	Stöðuhólkur	أنبـــوب المباعـــدة
77	Set pelat label	Прибор со натписни плочки	Typeskiltsett	Merkiplötusett	مجموعــة لوحــة البيانـــات
69	Rivet	Клин	Nagle	Hnoðnagli	مســمار برشــام
76	Penutup head pompa	Капак за главата на пумпата	Pumpehodedeksel	Hlíf á dæluhaus	غطــاء رأس المضــخة
100	O-ring	О-прстен	O-ring	O-hringur	حلقــة دائريـــة
105	Flensa adaptor	Заптивка за вратило	Akseltetning	Öxulþétti	مـــانع تســرب عمــود الإدارة
201	Wadah motor	Прирабница	Flens	Festibúnaður	الشـــفة
203	Head pompa	Потпорен прстен	Sikringsring	Festihringur	حلقـــة تثبيـــت

CR, CRI, CRN 1s, 1, 3 and 5

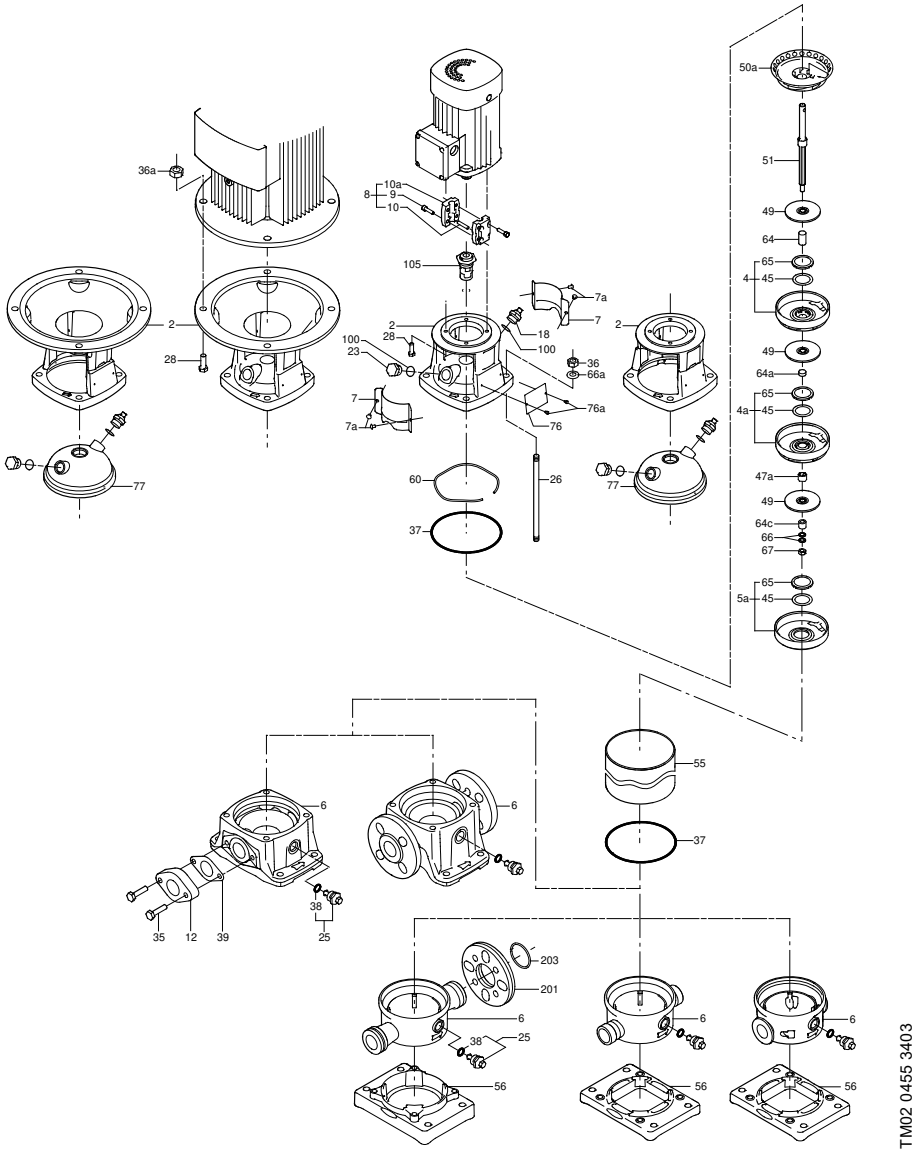

CR, CRI, CRN 10, 15 and 20

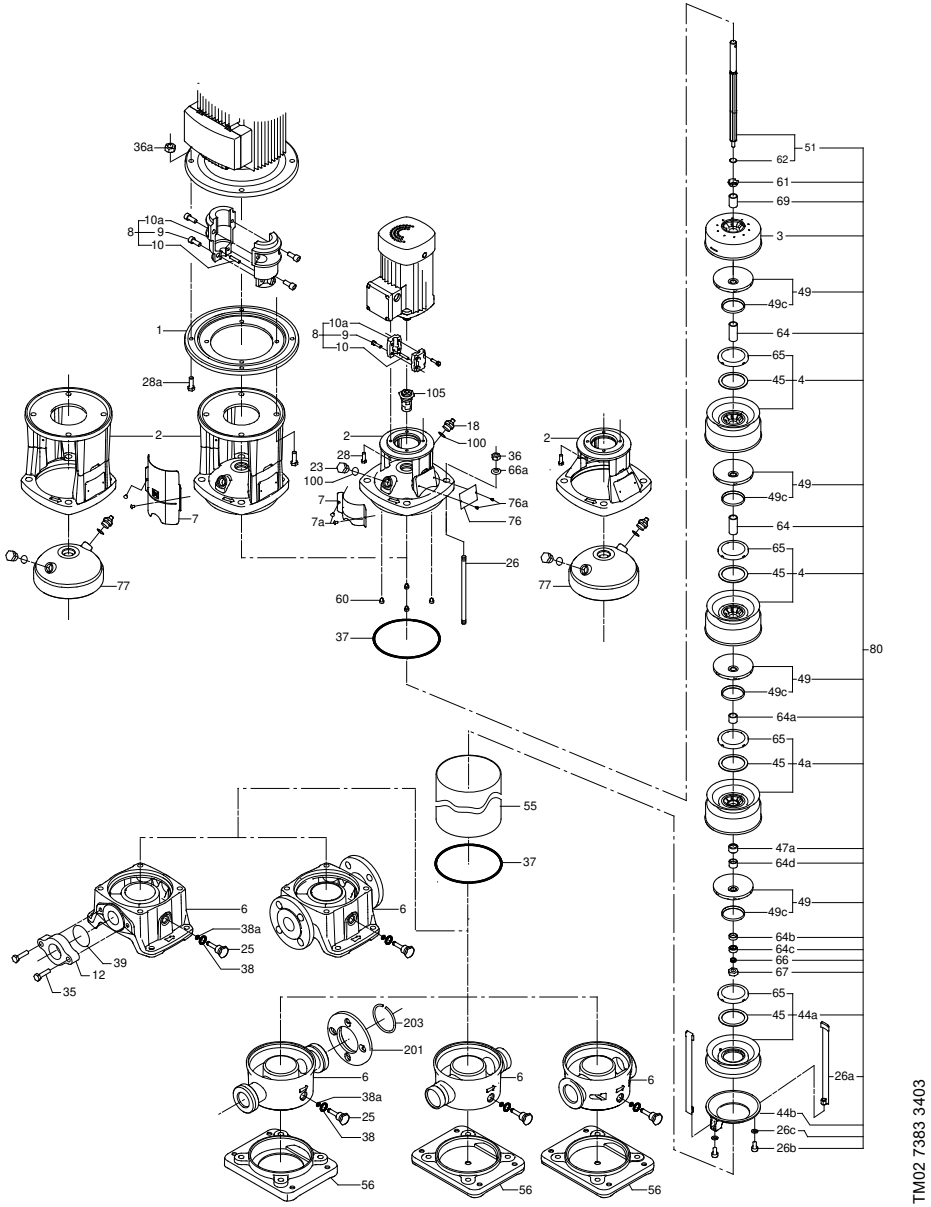

CR, CRN 32, 45, 64

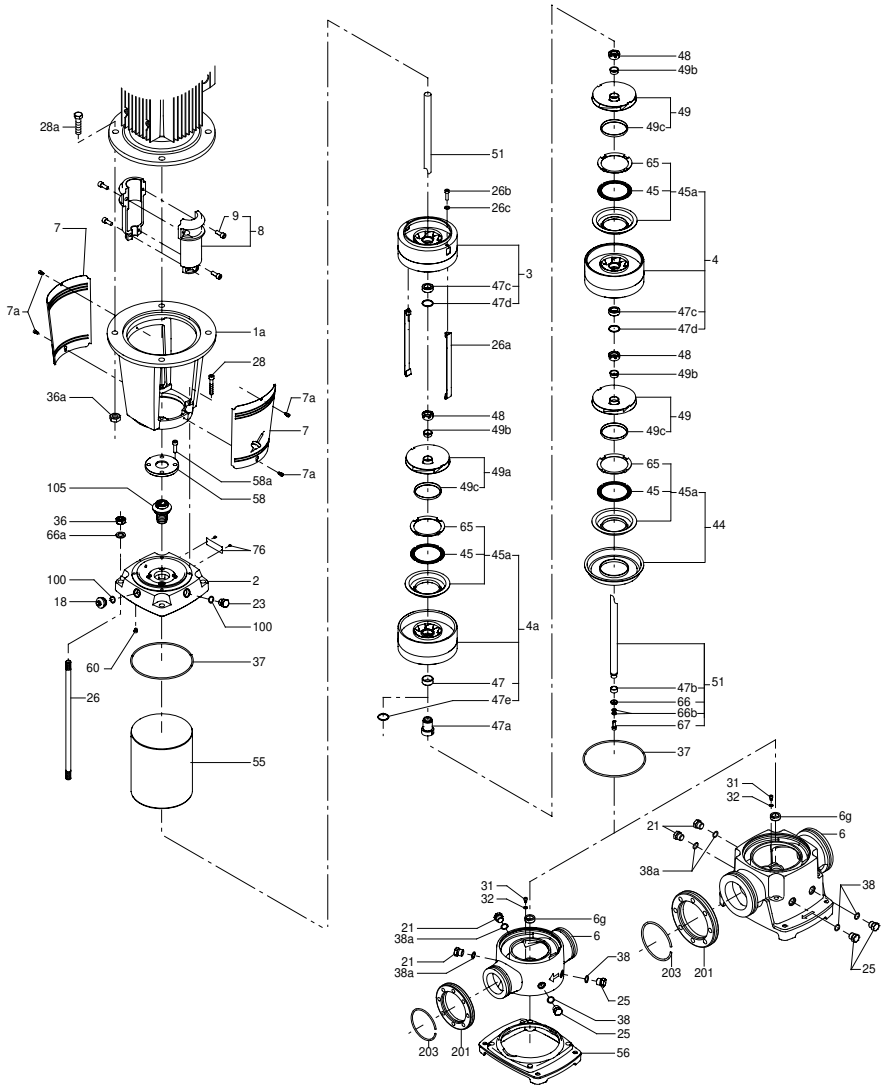

TM01 9996 3600

1

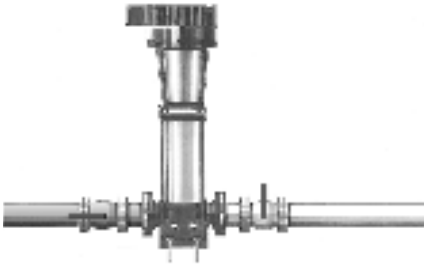

TM01 1403 4497

2

TM01 1404 4497

3

TM01 1405 4497

4

TM01 1406 4497

5

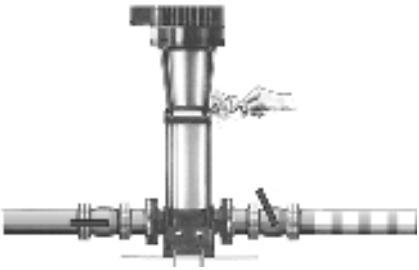

TM01 1407 4497

6

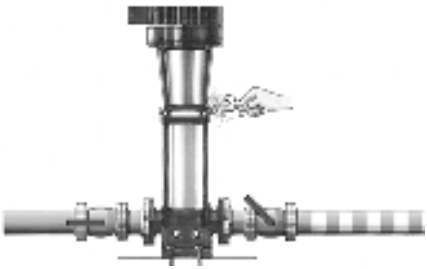

TM01 1408 4497

7

TM01 1409 4497

8

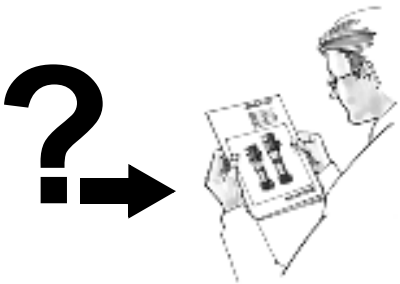

TM01 9988 3600

GB Startup

1 Close the isolating valve on the outlet side of the pump and open the isolating valve on the inlet side.	**2** Remove the priming plug from the pump head and slowly fill the pump with liquid. Replace the priming plug and tighten securely.
3 See the correct direction of rotation of the pump on the motor fan cover.	**4** Start the pump and check the direction of rotation.
5 Vent the pump by means of the vent valve in the pump head. At the same time, open the outlet isolating valve a little.	**6** Continue to vent the pump. At the same time, open the outlet isolating valve a little more.
7 Close the vent valve when a steady stream of liquid runs out of it. Completely open the outlet isolating valve.	**8** For further information, see section *4. Starting up the product*.

BG Пускане в действие

1 Затваря се спирателния кран на напорната страна, а този на смукателната се отваря.	**2** Демонтира се пробката за пълнене и помпата бавно се пълни.
3 Вижте правилната посока на въртене на капака на мотора.	**4** Включете помпата и проверете правилността на посоката на въртене.
5 Обезвъздушете през обезвъздушителния вентил като същевременно малко отворете крана на напорната страна.	**6** Продължете да обезвъздушавате като отваряте крана на напорната страна повече.
7 Затворете обезвъздушителния вентил, когато от него протече флуид. Отворете изцяло крана на напорната страна.	**8** За повече информация вж. раздел *4. Стартиране на продукта*.

CZ Uvedení do provozu

1 Uzavřete uzavírací armaturu na výtlačné straně čerpadla a otevřete uzavírací armaturu na sací straně čerpadla.	**2** Z hlavy čerpadla vyšroubujte plnicí zátku a do čerpadla pomalu nalévejte kapalinu. Plnící zátku vraťte na své místo a pevně utáhněte.
3 Podle šipky na krytu ventilátoru motoru čerpadla zjistěte směr otáčení hřídele čerpadla.	**4** Zapněte čerpadlo a zkontrolujte, zda směr otáčení odpovídá směru uvedenému na krytu ventilátoru motoru.
5 Čerpadlo odvzdušněte pomocí odvzdušňovacího ventilu umístěného ve hlavě čerpadla. Současně mírně pootevřete uzavírací armaturu na výtlačné straně čerpadla.	**6** Pokračujte v odvzdušňování čerpadla. Současně otevřete poněkud více uzavírací armaturu na výtlačné straně čerpadla.
7 Odvzdušňovací ventil uzavřete, jakmile jím začne vytékat kapalina bez vzduchu. Otevřete naplno uzavírací armaturu na výtlačné straně čerpadla tak, abyste dosáhli pracovního bodu čerpadla.	**8** Další informace jsou uvedeny v kapitole *4. Spouštění výrobku*.

DE Inbetriebnahme

1 Das druckseitige Absperrventil schließen und das saugseitige Absperrventil öffnen.	**2** Einfüllstopfen demontieren und Pumpe langsam auffüllen. Einfüllstopfen wieder einschrauben und fest anziehen.
3 Siehe richtige Drehrichtung auf der Lüfterhaube des Motors.	**4** Pumpe einschalten und Drehrichtung der Pumpe prüfen.
5 Pumpe über Entlüftungsventil im Kopfstück der Pumpe entlüften. Gleichzeitig das druckseitige Absperrventil ein wenig öffnen.	**6** Die Entlüftungsvorgehensweise fortsetzen. Gleichzeitig das druckseitige Absperrventil ein bisschen mehr öffnen.
7 Entlüftungsventil schließen, wenn das Medium aus dem Ventil herausläuft. Das druckseitige Absperrventil ganz öffnen.	**8** Weitere Informationen hierzu finden Sie in Abschnitt *4. Inbetriebnahme des Produkts*.

DK Idriftsætning

1 Luk afspærringsventilen på pumpens afgangsside og åbn afspærringsventilen på pumpens tilgangsside.	**2** Afmontér spædeproppen i topstykket og spæd pumpen langsomt. Montér derefter spædeproppen igen.
3 Se pumpens korrekte omdrejningsretning på motorens ventilatorskærm.	**4** Start pumpen og kontrollér pumpens omdrejningsretning.
5 Udluft pumpen på udluftningsventilen, som er placeret i topstykket. Åbn samtidig afspærringsventilen på pumpens afgangsside lidt.	**6** Fortsæt med at udlufte pumpen. Åbn samtidig afspærringsventilen på pumpens afgangsside lidt mere.
7 Luk udluftningsventilen, når der løber en jævn væskestrøm ud af den. Åbn afspærringsventilen på pumpens afgangsside helt.	**8** For yderligere information, se afsnit *4. Idriftsætning af produktet*.

EE Käivitamine

1 Sulgege ventiil pumba survepoolel ja avage ventiil pumba imipoolel.	**2** Eemaldage pumbalt täiteava kork ja täitke pump aegamööda vedelikuga. Pange kork tagasi oma kohale ja kinnitage hoolikalt.
3 Pöörlemissuund on tähistatud nooltega ventilaatori kattel.	**4** Käivitage pump ja kontrollige selle pöörlemissuunda.
5 Ventileerige pumpa selle peas paikneva õhutusventiili abil. Samal ajal avage veidi survepoole ventiili.	**6** Jätkake pumba ventileerimist. Samal ajal avage veelgi rohkem survepoole ventiili.
7 Sulgege õhutusventiil niipea, kui vedelik hakkab ühtlaselt välja voolama. Avage survepoole ventiil täielikult.	**8** Lisainfot vt jaotisest *4. Pumba käivitamine*.

ES Puesta en marcha

1 Cerrar la válvula de corte en el lado de descarga de la bomba y abrir la válvula de corte en el lado de aspiración.	**2** Quitar el tapón de cebado del cabezal de la bomba y llenar la bomba despacio de agua. Volver a poner el tapón de cebado y apretarlo bien.
3 Comprobar el sentido de giro correcto de la bomba en la tapa del ventilador del motor.	**4** Poner la bomba en marcha y comprobar el sentido de giro.
5 Purgar la bomba mediante la válvula de purga en el cabezal de la bomba. Al mismo tiempo, abrir un poco la válvula de corte de la descarga.	**6** Seguir purgando la bomba. Al mismo tiempo abrir un poco más la válvula de corte de la descarga.
7 Cerrar la válvula de purga cuando salga por la misma un flujo constante de líquido. Abrir la válvula de corte de la descarga completamente.	**8** Para obtener más información, consulte la sección *4. Puesta en marcha del producto*.

FI Käyttöönotto

1 Sulje pumpun painepuolen sulkuventtiili ja avaa tulopuolen sulkuventtiili.	**2** Irroita pumpun yläkappaleen täyttötulppa ja täytä pumppu hitaasti. Asenna täyttötulppa tämän jälkeen.
3 Tarkista tuuletinkannesta pumpun oikea pyörimissuunta.	**4** Käynnistä pumppu ja varmista oikea pyörimissuunta.
5 Ilmaa pumppu yläkappaleessa sijaitsevan ilmausruuvin kautta. Aukaise samalla hiukan pumpun painepuolen sulkuventtiiliä.	**6** Jatka pumpun ilmaamista ja avaa pumpun painepuolen sulkuventtiiliä hiukan enemmän.
7 Sulje ilmausventtiili kun siitä suihkuaa tasainen vesivirta. Aukaise pumpun painepuolen sulkuventtiili kokonaan.	**8** Lisätietoja on kohdassa *4. Käyttöönotto*.

FR Mise en route

1 Fermer la vanne d'isolement du côté refoulement et ouvrir la vanne d'isolement du côté aspiration de la pompe.	**2** Démonter le bouchon d'amorçage de la tête de pompe et amorcer lentement la pompe. Remettre en place le bouchon d'amorçage.
3 Voir le sens correct de rotation de la pompe sur le capot du ventilateur du moteur.	**4** Démarrer la pompe et vérifier son sens de rotation.
5 Purger la pompe par la vis de purge située dans la tête de pompe. Ouvrir simultanément légèrement la vanne d'isolement du côté refoulement.	**6** Continuer à purger la pompe. Ouvrir simultanément un peu plus la vanne d'isolement du côté refoulement.
7 Fermer la vis de purge lorsqu'un filet d'eau homogène s'écoule. Ouvrir entièrement la vanne d'isolement du côté refoulement.	**8** Pour plus d'informations, voir paragraphe *4. Démarrage*.

GR Εκκίνηση

1 Κλείστε τη βάνα απομόνωσης στην πλευρά κατάθλιψης της αντλίας και ανοίξτε τη βάνα απομόνωσης στην πλευρά αναρρόφησης.	**2** Αφαιρέστε την τάπα πλήρωσης από την κεφαλή της αντλίας και γεμίστε σιγάσιγά την αντλία με υγρό. Επανατοποθετήστε την τάπα πλήρωσης και σφίγξτε τη καλά.
3 Δείτε τη σωστή φορά περιστροφής της αντλίας στο κάλυμμα ανεμιστήρα του κινητήρα.	**4** Θέστε την αντλία σε λειτουργία και ελέγξτε τη φορά περιστροφής.
5 Εξαερώστε την αντλία με τη βοήθεια της βαλβίδας εξαέρωσης στην κεφαλή της αντλίας. Ταυτόχρονα, ανοίξτε λίγο τη βάνα απομόνωσης κατάθλιψης.	**6** Συνεχίστε την εξαέρωση της αντλίας. Ταυτόχρονα, ανοίξτε λίγο ακόμη τη βάνα απομόνωσης κατάθλιψης.
7 Κλείστε τη βαλβίδα εξαέρωσης όταν πια η ροή του υγρού που εξέρχεται είναι σταθερή. Ανοίξτε τελείως τη βάνα απομόνωσης κατάθλιψης.	**8** Για περισσότερες πληροφορίες, βλέπε κεφάλαιο *4. Εκκίνηση του προϊόντος*.

HR Puštanje u pogon

1 Zatvoriti zaporni ventil na tlačnoj strani a otvoriti zaporni ventil na usisnoj strani.	**2** Skinuti čep za punjenje pa crpku polagano napuniti. Ponovno vratiti čep za punjenje te ga čvrsto pritegnuti.
3 Prekontrolirati ispravni smjer vrtnje na poklopcu ventilatora motora.	**4** Uključiti crpku pa ispitati ispravni smjer vrtnje crpke.
5 Odzračiti crpku preko odzračnog ventila u glavi crpke. Istovremeno malo otvoriti zaporni ventil na tlačnoj strani.	**6** Nastaviti s odzračivanjem. Istovremeno još malo jače otvoriti zaporni ventil na tlačnoj strani.
7 Zatvoriti odzračni ventil kad medij počne izlaziti na ventilu. Potpuno otvoriti zaporni ventil na tlačnoj strani.	**8** Za više informacija, pogledajte poglavlje *4. Pokretanje proizvoda*.

HU Üzembehelyezés

1 A nyomóoldali elzárószelepet zárjuk el, a szívóoldali elzárószelepet nyissuk ki.	**2** A betöltőcsavart vegyük ki és a szivattyút lassan töltsük fel. A betöltőcsavart csavarjuk vissza és szorosan húzzuk meg.
3 Nézzük meg a motor ventillátorfedelén a helyes forgásirányt.	**4** Kapcsoljuk be a szivattyút és ellenőrizzük forgásirányát.
5 A szivattyú fejrészén lévő légtelenítőszelepen át légtelenítsük a szivattyút. Egyidejűleg kissé nyissuk meg a nyomóoldali elzárószelepet.	**6** Folytassuk a légtelenítést, egyidejűleg kissé jobban nyissuk meg a nyomóoldali elzárószelepet.
7 Amikor a légtelenítőszelepen már a levegőmentes szállított közeg lép ki, zárjuk el a szelepet. A nyomóoldali elzárószelepet teljesen nyissuk ki.	**8** További információkat a *4. A termék beüzemelése* című részben talál.

IT Avviamento

1 Chiudere la valvola di intercettazione sul lato di mandata della pompa e aprire quella sul lato di aspirazione.	**2** Rimuovere il tappo di adescamento dalla testa pompa e versare lentamente il liquido nella pompa. Reinserire il tappo e chiuderlo accuratamente.
3 Osservare il corretto senso di rotazione della pompa sul coperchio della ventola motore.	**4** Avviare la pompa e controllare il senso di rotazione.
5 Sfiatare la pompa per mezzo della valvola di sfiato sulla testa pompa. Contemporaneamente, aprire leggermente la valvola di mandata.	**6** Continuare a sfiatare la pompa, continuando contemporaneamente ad aprire la valvola di mandata.
7 Chiudere la valvola di sfiato quando fuoriesce un flusso di liquido costante. Aprire completamente la valvola di mandata.	**8** Per ulteriori informazioni, vedi sezione *4. Avviamento del prodotto*.

LT Paleidimas

1 Uždarykite vožtuvą siurblio išvado pusėje ir atidarykite vožtuvą siurblio įvado pusėje.	**2** Siurblio galvutėje atsukite pripildymo kamštelį ir siurblį lėtai pripildykite skysčio. Įstatykite pripildymo kamštelį ir gerai užveržkite.
3 Pažiūrėkite ant variklio ventiliatoriaus gaubto, kokia yra teisinga siurblio sukimosi kryptis.	**4** Paleiskite siurblį ir patikrinkite sukimosi kryptį.
5 Per siurblio galvutėje esantį oro išleidimo vožtuvą išleiskite iš siurblio orą. Tuo pačiu metu truputį atidarykite išvado vožtuvą.	**6** Tęskite oro išleidimą. Tuo pačiu metu truputį daugiau atidarykite išvado vožtuvą.
7 Oro išleidimo vožtuvą uždarykite, kai iš jo pradeda tekėti nusistovėjusi skysčio čiurkšlė. Visiškai atidarykite išvado vožtuvą.	**8** Daugiau informacijos pateikta skyriuje *4. Produkto paleidimas*.

LV Iedarbināšana

1 Aizveriet sprostvārstu sūkņa izplūdes pusē un atveriet sprostvārstu ieplūdes pusē.	**2** Noņemiet iepildīšanas aizgriezni no sūkņa galvas un lēnām piepildiet sūkni ar šķidrumu. Ievietojiet iepildīšanas aizgriezni atpakaļ un cieši aizgrieziet to.
3 Sūkņa pareizo rotācijas virzienu skatiet uz motora ventilatora vāka.	**4** Ieslēdziet sūkni un pārbaudiet rotācijas virzienu.
5 Vent the pump by means of the vent valve in the pump head. At the same time, open the outlet isolating valve a little.	**6** Turpiniet sūkņa atgaisošanu. Tajā pašā laikā atveriet izplūdes sprostvārstu nedaudz vairāk.
7 Atgaisojiet sūkni, izmantojot sūkņa galvā esošo atgaisošanas vārstu. Vienlaikus nedaudz atveriet izplūdes sprostvārstu.	**8** Papildinformāciju skatiet sadaļā *4. Produkta ieslēgšana*.

NL In bedrijf nemen

1 Sluit de scheidingsafsluiter aan de perszijde van de pomp en open de afsluiter aan de zuigzijde.	**2** Verwijder de ontluchtingsschroef van de pompkop en vul de pomp langzaam met vloeistof. Breng de ontluchtingsschroef terug op zijn plaats en zorg dat deze stevig vast zit.
3 Kijk of de draairichting van de pomp klopt (zie beschermkap van de motorventilator).	**4** Start de pomp en controleer de draairichting.
5 Ontlucht de pomp met behulp van de ontluchtingsklep in de pompkop. Open tegelijkertijd de persafsluiter een beetje.	**6** Ontlucht de pomp verder. Doe tegelijkertijd de persafsluiter iets verder open.
7 Sluit de ontluchtingsklep wanneer het medium gelijkmatig uit de ontluchtingsopening stroomt. Open de persafsluiter volledig.	**8** Voor meer informatie, zie paragraaf *4. Het product in bedrijf nemen*.

PL Uruchomienie

1 Zamknąć zawór odcinający na tłoczeniu pompy i otworzyć zawór odcinający na ssaniu.	**2** Z głowicy pompy zdjąć korek zalewowy i napełnić pompę cieczą. Założyć korek i dokręcić go mocno.
3 Poprzez pokrywę wentylatora silnika sprawdzić, czy kierunek obrotów pompy jest prawidłowy.	**4** Uruchomić pompę i jeszcze raz sprawdzić kierunek obrotów.
5 Poprzez otwór odpowietrzający na głowicy pompy odpowietrzyć pompę. Jednocześnie lekko otworzyć zawór odcinający na tłoczeniu.	**6** Dalej odpowietrzać pompę. Jednocześnie jeszcze trochę otworzyć zawór odcinający na tłoczeniu.
7 Gdy z otworu odpowietrzającego zacznie wypływać stały strumień cieczy, zamknąć go. Całkowicie otworzyć zawór odcinający na tłoczeniu.	**8** Dalsze informacje - zob. rozdział *4. Uruchamianie produktu*.

PT Arranque inicial

1 Feche a válvula de seccionamento do lado da descarga e abra a válvula de seccionamento do lado da aspiração.	**2** Retire o bujão de purga da cabeça da bomba e lentamente encha esta com o líquido. Monte o bujão de purga.
3 Certifique-se de que o sentido de rotação da bomba está correcto, i.e., está de acordo com o que se indica na tampa do ventilador do motor.	**4** Efectue o arranque da bomba e verifique o sentido de rotação.
5 Purgue a bomba por meio da respectiva válvula, existente na cabeça da bomba. Ao mesmo tempo, abra ligeiramente a válvula de seccionamento do lado da descarga.	**6** Continue a purgar a bomba. Ao mesmo tempo, abra um pouco mais a válvula de seccionamento do lado da descarga.
7 Feche a válvula de purga quando um caudal uniforme começar a sair por ela. Abra agora completamente a válvula de seccionamento do lado da descarga.	**8** Para mais informações, consulte a secção *4. Proceder ao arranque do produto*.

RO Punerea în funcţiune

1 Închideţi vana de refulare şi deschideţi vana de aspiraţie complet.	**2** Desfaceţi ventilul de amorsare din capul pompei şi încet umpleţi pompa cu lichid. Strângeţi bine ventilul după umplere.
3 Urmăriţi sensul corect de rotaţie al pompei indicat la partea superioară a motorului la ventilator.	**4** Porniţi pompa şi verificaţi sensul de rotaţie.
5 Aerisiţi pompa prin intermediul ventilului de aerisire situat în capul pompei. In acelaşi timp deschideţi vana de refulare.	**6** Continuaţi să aerisiţi pompa. In acelaşi timp deschideţi vana de refulare progresiv.
7 Inchideţi ventilul de aerisire când apa începe să arunce prin orificiu. Se va deschide complet vana de refulare.	**8** Pentru informaţii suplimentare, vezi secţiunea *4. Pornirea în funcţiune a produsului.*

RS Puštanje u rad

1 Zatvoriti zaustavni ventil na potisnoj strani i otvoriti zaustavni ventil na usisnoj strani.	**2** Demontirati ulivni priključak i polako napuniti pumpu. Ponovo ušrafiti ulivni priključak i čvrsto ga pritegnuti.
3 Uočiti pravilan smer obrtanja na poklopcu ventilatora motora.	**4** Uključiti pumpu i proveriti smer obrtanja pumpe.
5 Odzračiti pumpu preko odzračnog ventila na glavi pumpe. Istovremeno malo otvoriti zaustavni ventil na potisnoj strani.	**6** Nastaviti sa postupkom odzračivanja. Istovremeno zaustavni ventil na potisnoj strani otvoriti još malo više.
7 Kada radni fluid počne da ističe iz ventila zatvoriti odzračni ventil. Zaustavni ventil na potisnoj strani potpuno otvoriti.	**8** Za više informacija, pogledajte poglavlje *4. Puštanje proizvoda u rad.*

SE Igångkörning

1 Stäng avstängningsventilen på pumpens trycksida och öppna avstängningsventilen på sugsidan.	**2** Avlägsna spädproppen i toppstycket och fyll pumpen långsamt. Sätt sedan tillbaka proppen.
3 Kontrollera rätt rotationsriktning enligt motorns fläktkåpa.	**4** Starta pumpen och kontrollera pumpens rotationsriktning.
5 Avlufta pumpen med hjälp av ventilen på toppstycket. Öppna samtidigt avstängningsventilen på pumpens trycksida något.	**6** Fortsätt avlufta pumpen. Öppna samtidigt avstängningsventilen på trycksidan lite till.
7 Stäng avluftningsventilen när en jämn vätskeström kommer ut ur den. Öppna avstängningsventilen på trycksidan helt.	**8** Mer information finns i avsnitt *4. Igångkörning av produkten.*

SI Zagon

1 Tlačni zaporni ventil zapreti in odpreti sesalni zaporni ventil.	**2** Čep odprtine za nalivanje odpreti in črpalko počasi napolniti. Ponovno priviti čep in močno pritegniti.
3 Kontrolirati je potrebno pravilno smer vrtenja na pokrovu hlajenja motorja.	**4** Vklopiti črpalko in preveriti smer vrtenja črpalke.
5 Črpalko odzračiti s pomočjo odzračevalnega ventila na glavi črpalke. Istočasno nekoliko odpreti zaporni ventil na tlačni strani.	**6** Odzračevalni postopek nadaljevati. Istočasno na tlačni strani še bolj odpreti zaporni ventil.
7 Odzračevalni ventil zapreti, ko prične iztekati medij. Zaporni ventil na tlačni strani popolnoma odpreti.	**8** Za več informacij glejte poglavje *4. Zagon izdelka*.

SK Uvedenie do prevádzky

1 Uzavrite uzatváraciu armatúru na výtlačnej strane čerpadla a otvorte uzatváraciu armatúru na sacej strane čerpadla.	**2** Z hlavy čerpadla vyskrutkujte plniacu zátku a do čerpadla pomaly nalievajte kvapalinu. Plniacu zátku naskrutkujte späť a pevne ju dotiahnite.
3 Podľa šípky na kryte ventilátora motora čerpadla zistite smer otáčania sa hriadeľa čerpadla.	**4** Zapnite čerpadlo a skontrolujte, či smer otáčania sa hriadeľa zodpovedá smeru uvedenom na kryte ventilátora motora.
5 Čerpadlo odvzdušnite pomocou odvzdušňovacieho ventila umiestneného v hlave čerpadla. Súčastne mierne pootvorte uzatváraciu armatúru na výtlačnej strane čerpadla.	**6** Pokračujte v odvzdušňovaní čerpadla. Súčastne trochu pootvorte uzatváraciu armatúru na výtlačnej strane čerpadla.
7 Odvzdušňovací ventil uzatvorte akonáhle z neho začne vytekať kvapalina. Naplno otvorte uzatváraciu armatúru na výtlačnej strane čerpadla tak, aby ste dosiahli pracovný bod čerpadla.	**8** Ďalšie informácie sú uvedené v časti *4. Spustenie čerpadla*.

TR İlk çalıştırma

1 Pompanın basma tarafındaki izolasyon vanasını kapatın ve emme tarafındaki izolasyon vanasını açın.	**2** Doldurma tapasını pompa başından sökün ve pompayı sıvı ile doldurun. Doldurma tapasını tekrar yerine takın ve sağlam bir şekilde sıkın.
3 Motor fan kapağında bulunan doğru pompa dönüş yönüne bakın.	**4** Pompayı çalıştırın ve dönüş yönünü kontrol edin.
5 Pompa başında bulunan tahliye valfı yardımıyla pompanın havasını alın. Aynı anda, basma izolasyon valfını biraz açın.	**6** Pompanın havasını almaya devam edin. Aynı anda, basma izolasyon valfını biraz daha açın.
7 Düzenli bir sıvı akışı gerçekleştiğinde, tahliye valfını kapatın. Basma izolasyon valfını tamamen açın.	**8** Daha fazla bilgi için bkz. bölüm *4. Ürünün çalıştırılması*.

UA Запуск

1 Закрити запірний кран на виході насоса та відкрити запірний кран на всмоктувальному трубопроводі.	**2** Викрутити заглушку з верхньої частини насоса та повільно заповнити насос рідиною. Вкрутити заглушку.
3 Перевірити правильний напрямок обертання насоса, що вказаний на кришці вентилятора.	**4** Запустити насос та перевірити напрямок обертання.
5 Видалити повітря з насоса з допомогою повітряного клапана в верхній частині насоса. Одночасно привідкрити вихідний запірний кран.	**6** Продовжувати видаляти повітря з насоса. Одночасно відкрити вихідний кран ще трохи більше.
7 Закрити повітряний клапан, коли постійний потік рідини потече з насоса. Повністю відкрити вихідний запірний кран.	**8** Додаткову інформацію див. у розділі *4. Запуск виробу*.

CN 启动

1 关闭水泵出水侧的隔离阀，打开进水侧的隔离阀。	**2** 从泵头上拆下注水塞并缓慢加注水泵。装好注水塞并确保拧紧。
3 在电机风扇盖上察看水泵正确的转动方向。	**4** 启动水泵，检查转动方向。
5 通过位于泵头的排气阀对泵排气。与此同时，再略微打开出水侧隔离阀。	**6** 继续对水泵排气。与此同时，再将出水侧隔离阀打开得更大一点。
7 在看到液体持续平稳地从排气阀流出后关闭此阀。 完全打开出水隔离阀。	**8** 更多信息请参见章节*4. 启动产品*。

MK Вклучување

1 Затворете го изолацискиот вентил на одводната страна од пумпата и полека отворете го изолацискиот вентил на доводната страна.	**2** Извадете го чепот за вшмукување од главата на пумпата и полека наполнете ја пумпата со течност. Заменете го чепот за вшмукување и цврсто затегнете го.
3 Точниот правец на ротација е прикажан со стрелки на капакот на вентилаторот на моторот.	**4** Вклучете ја пумпата и проверете ја насоката на ротирање.
5 Обезвоздушете ја пумпата со помош на вентил за обезвоздушување во главата на пумпата. Истовремено, подотворете го одводниот изолациски вентил.	**6** Продолжете со обезвоздушување на пумпата. Истовремено, отворете го малку повеќе одводниот изолациски вентил.
7 Затворете го вентилот за обезвоздушување штом од него ќе протече рамномерен млаз течност. Целосно отворете го одводниот изолациски вентил.	**8** За дополнителни информации, видете во делот *4. Вклучување на производот*.

ID Mulai

1 Tutup katup penutup di bagian pelepasan pompa lalu buka katup penutup di bagian hisap.	**2** Lepas sumbat pemancing dari kepala pompa lalu secara perlahan isilah pompa dengan air. Pasang kembali sumbat pemancing dan kencangkan.
3 Lihat arah rotasi pompa yang benar pada penutup kipas motor.	**4** Jalankan pompa lalu periksa arah rotasi pompa.
5 Pancing pompa dengan menggunakan sumbat pemancing di head pompa. Pada saat bersamaan, buka sedikit katup pemisah dengan sisi pelepasan.	**6** Lanjutkan memancing pompa. Pada saat bersamaan, buka lebih lebar katup pemisah dengan sisi pelepasan.
7 Tutup katup pemancing setelah air keluar deras. Membuka sepenuhnya katup pemisah pelepasan.	**8** Untuk informasi lebih lanjut, lihat bagian *4. Menghidupkan produk*.

NO Oppstart

1 Steng isoleringsventilen på utløpssiden av pumpen og åpne isoleringsventilen på innløpssiden.	**2** Fjern fyllepluggen fra pumpehodet og fyll pumpen langsomt med væske. Sett på plass fyllepluggen og trekk godt til.
3 Se riktig rotasjonsretning for pumpen på motorviftedekselet.	**4** Start pumpen og kontroller rotasjonsretningen.
5 Luft ut pumpen ved hjelp av lufteventilen i pumpehodet. Åpne samtidig utløpsventilen litt.	**6** Fortsett å lufte pumpen. Åpne samtidig utløpsventilen litt mer.
7 Steng lufteventilen når en jevn strøm av væske kommer ut av den. Åpne utløpsventilen helt.	**8** Du finner flere opplysninger i avsnitt *4. Oppstart av produktet*.

IS Ræsing

1 Lokið einangrunarlokanum á úttakshlið dælunnar og opnið einangrunarlokann á inntakshliðinni.	**2** Fjarlægið forgjafartappann úr dæluhausnum og fyllið dæluna hægt með vökva. Setjið forgjafartappann aftur í og herðið tryggilega.
3 Upplýsingar um rétta snúningsstefnu dælunnar eru á viftuhlíf mótorsins.	**4** Ræsið dæluna og athugið snúningsstefnuna.
5 Loftið út úr dælunni með því að nota loftlokann í dæluhausnum. Opnið úttakseinangrunarlokann lítillega um leið.	**6** Haldið áfram að lofta út úr dælunni. Opnið um leið aðeins meira fyrir úttakseinangrunarlokann.
7 Lokið loftlokanum þegar stöðugur straumur af vökva rennur út um hann. Opnið úttakseinangrunarlokann alveg.	**8** Nánari upplýsingar eru í kafla *4. Gangsetning vörunnar*.

2 قـم بإزالـة سـدادة التحضـير مـن فوهـة المضـخة واملأهـا ببـطء بالسـائل. أعـد تركيـب سـدادة التحضـير وأحكـم ربطهـا.	**1** أغلـق الصـمام الفاصـل فـي ناحيـة خـروج المضـخة وافتـح الصـمام الفاصـل فـي ناحيـة الـدخول.
4 شـغل المضـخة وتحقـق مـن اتجـاه الـدوران.	**3** لاحـظ اتجـاه الـدوران الصـحيح للمضـخة علـى غطـاء مروحـة المحـرك.
6 اسـتمر فـي تنفيـس المضـخة. وفـي نفـس الوقـت، زد فتـح الصـمام الفاصـل عنـد ناحيـة الخـروج بنسـبة قليلـة.	**5** نفـس المضـخة عـن طـريق صـمام التنفيـس الموجـود عنـد فوهـة المضـخة. وفـي نفـس الوقـت، افتـح الصـمام الفاصـل عنـد ناحيـة الخـروج بنسـبة قليلـة.
8 لمزيـد مـن المعلومـات، انظـر القسـم 4. بـدء تشـغيل المنتـج.	**7** قـم بـإغلاق صـمام التنفيـس عنـدما يخـرج منـه تـدفق مسـتمر مـن السـائل. افتـح الصـمام الفاصـل مـن ناحيـة الخـروج بالكامـل.

YETKİLİ GRUNDFOS SERVİSLERİ

Firma	Adres	Telefon Cep telefonu Faks	İlgili Kişi Eposta
GRUNDFOS POMPA KOCAELİ	GEBZE ORGANİZE SANAYİ BÖLGESİ. İHSAN DEDE CADDESİ.2.YOL 200.SOKAK.NO:204 GEBZE KOCAELİ	0262 679 79 79 0553 259 51 63 0262 679 79 05	EMRAH ŞİMŞEK esimsek@grundfos.com
SUNPO ELEKTRİK ADANA	YEŞİLOBA MAH. 46003 SOK. ARSLANDAMI İŞ MERK. C BLOK NO:6/2-I SEYHAN ADANA	0322 428 50 14 0533 461 71 14 0322 428 48 49	LEVENT BAKIRKOL sunpo-elektrik@hotmail.com
ARDA POMPA ANKARA	26 NOLU İŞ MERKEZİ 1120.SOKAK NO:5/1,5/5 OSTİM/ANKARA	0312 385 98 93 0541 805 89 44 0312 385 8904	METİN ENGİN CANBAZ metincanbaz@ardapompa.com.tr
UĞUR SU POMPALARI ANKARA	AHİ EVRAN MAHALLESİ ÇAĞRIŞIM CADDESİ NO:2/15 SİNCAN /ANKARA	0312 394 37 52 0532 505 12 62 0312 394 37 19	UĞUR YETİŞ ÖCAL uguryetisocal@gmail.com
GROSER A.Ş. ANTALYA	ŞAFAK MAHALLESİ.5041.SOKAK.SANAYİ 28 C BLOK NO:29 KEPEZ ANTALYA	0242 221 43 43 0532 793 89 74 0242 221 43 42	DOĞAN YÜCEL servis@groseras.com
KOÇYİĞİTLER ELEKTRİK BOBİNAJ ANTALYA	ORTA MAH. SERİK CAD. NO.116 SERİK ANTALYA	0242 722 48 46 0532 523 29 34 0242 722 48 46	BİLAL KOÇYİĞİT kocyigitler@kocyigitlerbobinaj.com
TEKNİK BOBİNAJ BURSA	ALAADDİN BEY MH.624.SK MESE 5 İŞ MERKEZİ NO:26 D:10 NİLÜFER/BURSA	0224 443 78 83 0507 311 19 08 0224 443 78 95	GÜLDEN MÜÇEOĞLU gulden@tbobinaj.com.tr
ASİN TEKNOLOJİ GAZİANTEP	MÜCAHİTLER MAHALLESİ 54 NOLU SOKAK.GÜNEYDOĞU İŞ MERKEZİ NO:10/A ŞEHİTKAMİL	0342 321 69 66 0532 698 69 66 0342 321 69 61	MEHMET DUMAN mduman@asinteknoloji.com.tr
ARI MOTOR İSTANBUL	ORHANLI MESCİT MH.DEMOKRASİ CD.BİRMES SAN.SİT.A-3 BLOK NO:9 TUZLA İSTANBUL	0216 394 21 67 0532 501 47 69 0216 394 23 39	EMİN ARI aycan@arimotor.com.tr
SERİ MEKANİK İSTANBUL	SEYİTNİZAM MAH. DEMİRCİLER SİT. 7.YOL . NO:6 ZEYTİNBURNU İSTANBUL	0212 679 57 23 0532 740 18 02 0212 415 61 98	TAMER ERÜNSAL servis@serimekanik.com
DAMLA POMPA İZMİR	1203/4 SOKAK NO:2/E YENİŞEHİR İZMİR	0232 449 02 48 0532 277 96 44 0232 459 43 05	NEVZAT KIYAK nkiyak@damlapompa.com
ÇAĞRI ELEKTRİK KAYSERİ	ESKİ SANAYİ BÖLGESİ 3.CADDE NO;3-B KOCASİNAN-KAYSERİ	0352 320 19 64 0532 326 23 25 0352 330 37 36	ADEM ÇAKICI kayseri.cagrielektrik@gmail.com
MAKSOM OTOMASYON SAMSUN	19 MAYIS MAHALLESİ.642.SOKAK.NO:23 TEKKEKÖY SAMSUN	0362 256 23 56 0532 646 61 42 -	MUSTAFA SARI info@maksom.com
DETAY MÜHENDİSLİK TEKİRDAĞ	ZAFER MAHALLESİ ŞEHİT YÜZBAŞI YÜCEL KENTER CADDESİ 06/A BLOK NO:5-6 ÇORLU TEKİRDAĞ	0282 673 51 33 0549 668 68 68 0282 673 51 35	EROL KARTOĞLU erol@detay-muhendislik.com
ROTATEK ENDÜSTRİYEL TEKİRDAĞ	ZAFER MH. ŞEHİT YÜZBAŞI YÜCEL KENTER CD. YENİ SANAYİ SİTESİ 08-A BLOK NO:14 ÇORLU / TEKİRDAĞ	0282 654 51 99 0532 788 11 39 0282 654 51 81	ÖZCAN AKBAŞ ozcan@rotaendustriyel.com
İLDEM TEKNİK ISITMA VAN	ŞEREFİYE MAH ORDU CAD ARAS AP NO 75 İPEKYOLU VAN	0432 216 20 83 0532 237 54 59 0432 216 20 83	BURHAN DEMİREKİ il-dem-teknik@hotmail.com
BARIŞ BOBİNAJ K.K.T.C.	LARNAKA YOLU ÜZERİ.PAPATYA APT.NO:3-4 GAZİMAĞUSA	0542 884 06 62 0542 854 11 35 0533 884 06 62	BARIŞ KIZILKILINÇ barisbobinaj@hotmail.com

Argentina
Bombas GRUNDFOS de Argentina S.A.
Ruta Panamericana km. 37.500 Centro Industrial Garin
1619 Garín Pcia. de B.A.
Phone: +54-3327 414 444
Telefax: +54-3327 45 3190

Australia
GRUNDFOS Pumps Pty. Ltd.
P.O. Box 2040
Regency Park
South Australia 5942
Phone: +61-8-8461-4611
Telefax: +61-8-8340 0155

Austria
GRUNDFOS Pumpen Vertrieb Ges.m.b.H.
Grundfosstraße 2
A-5082 Grödig/Salzburg
Tel.: +43-6246-883-0
Telefax: +43-6246-883-30

Belgium
N.V. GRUNDFOS Bellux S.A.
Boomsesteenweg 81-83
B-2630 Aartselaar
Tél.: +32-3-870 7300
Télécopie: +32-3-870 7301

Belarus
Представительство ГРУНДФОС в Минске
220125, Минск
ул. Шафарнянская, 11, оф. 56, БЦ «Порт»
Тел.: +375 17 397 397 3
+375 17 397 397 4
Факс: +375 17 397 397 1
E-mail: minsk@grundfos.com

Bosnia and Herzegovina
GRUNDFOS Sarajevo
Zmaja od Bosne 7-7A,
BH-71000 Sarajevo
Phone: +387 33 592 480
Telefax: +387 33 590 465
www.ba.grundfos.com
e-mail: grundfos@bih.net.ba

Brazil
BOMBAS GRUNDFOS DO BRASIL
Av. Humberto de Alencar Castelo Branco, 630
CEP 09850 - 300
São Bernardo do Campo - SP
Phone: +55-11 4393 5533
Telefax: +55-11 4343 5015

Bulgaria
Grundfos Bulgaria EOOD
Slatina District
Iztochna Tangenta street no. 100
BG - 1592 Sofia
Tel. +359 2 49 22 200
Fax. +359 2 49 22 201
email: bulgaria@grundfos.bg

Canada
GRUNDFOS Canada Inc.
2941 Brighton Road
Oakville, Ontario
L6H 6C9
Phone: +1-905 829 9533
Telefax: +1-905 829 9512

China
GRUNDFOS Pumps (Shanghai) Co. Ltd.
10F The Hub, No. 33 Suhong Road
Minhang District
Shanghai 201106
PRC
Phone: +86 21 612 252 22
Telefax: +86 21 612 253 33

COLOMBIA
GRUNDFOS Colombia S.A.S.
Km 1.5 vía Siberia-Cota Conj. Potrero Chico,
Parque Empresarial Arcos de Cota Bod. 1A.
Cota, Cundinamarca
Phone: +57(1)-2913444
Telefax: +57(1)-8764586

Croatia
GRUNDFOS CROATIA d.o.o.
Buzinski prilaz 38, Buzin
HR-10010 Zagreb
Phone: +385 1 6595 400
Telefax: +385 1 6595 499
www.hr.grundfos.com

GRUNDFOS Sales Czechia and Slovakia s.r.o.
Čajkovského 21
779 00 Olomouc
Phone: +420-585-716 111

Denmark
GRUNDFOS DK A/S
Martin Bachs Vej 3
DK-8850 Bjerringbro
Tlf.: +45-87 50 50 50
Telefax: +45-87 50 51 51
E-mail: info_GDK@grundfos.com
www.grundfos.com/DK

Estonia
GRUNDFOS Pumps Eesti OÜ
Peterburi tee 92G
11415 Tallinn
Tel: + 372 606 1690
Fax: + 372 606 1691

Finland
OY GRUNDFOS Pumput AB
Trukkikuja 1
FI-01360 Vantaa
Phone: +358-(0) 207 889 500

France
Pompes GRUNDFOS Distribution S.A.
Parc d'Activités de Chesnes
57, rue de Malacombe
F-38290 St. Quentin Fallavier (Lyon)
Tél.: +33-4 74 82 15 15
Télécopie: +33-4 74 94 10 51

Germany
GRUNDFOS GMBH
Schlüterstr. 33
40699 Erkrath
Tel.: +49-(0) 211 929 69-0
Telefax: +49-(0) 211 929 69-3799
e-mail: infoservice@grundfos.de
Service in Deutschland:
e-mail: kundendienst@grundfos.de

Greece
GRUNDFOS Hellas A.E.B.E.
20th km. Athinon-Markopoulou Av.
P.O. Box 71
GR-19002 Peania
Phone: +0030-210-66 83 400
Telefax: +0030-210-66 46 273

Hong Kong
GRUNDFOS Pumps (Hong Kong) Ltd.
Unit 1, Ground floor
Siu Wai Industrial Centre
29-33 Wing Hong Street &
68 King Lam Street, Cheung Sha Wan
Kowloon
Phone: +852-27861706 / 27861741
Telefax: +852-27858664

Hungary
GRUNDFOS Hungária Kft.
Tópark u. 8
H-2045 Törökbálint,
Phone: +36-23 511 110
Telefax: +36-23 511 111

India
GRUNDFOS Pumps India Private Limited
118 Old Mahabalipuram Road
Thoraipakkam
Chennai 600 096
Phone: +91-44 2496 6800

Indonesia
PT. GRUNDFOS POMPA
Graha Intirub Lt. 2 & 3
Jln. Cililitan Besar No.454. Makasar, Jakarta Timur
ID-Jakarta 13650
Phone: +62 21-469-51900
Telefax: +62 21-460 6910 / 460 6901

Ireland
GRUNDFOS (Ireland) Ltd.
Unit A, Merrywell Business Park
Ballymount Road Lower
Dublin 12
Phone: +353-1-4089 800
Telefax: +353-1-4089 830

Italy
GRUNDFOS Pompe Italia S.r.l.
Via Gran Sasso 4
I-20060 Truccazzano (Milano)
Tel.: +39-02-95838112
Telefax: +39-02-95309290 / 95838461

Japan
GRUNDFOS Pumps K.K.
1-2-3, Shin-Miyakoda, Kita-ku, Hamamatsu
431-2103 Japan
Phone: +81 53 428 4760
Telefax: +81 53 428 5005

Korea
GRUNDFOS Pumps Korea Ltd.
6th Floor, Aju Building 679-5
Yeoksam-dong, Kangnam-ku, 135-916
Seoul, Korea
Phone: +82-2-5317 600
Telefax: +82-2-5633 725

Latvia
SIA GRUNDFOS Pumps Latvia
Deglava biznesa centrs
Augusta Deglava ielā 60, LV-1035, Rīga,
Tālr.: + 371 714 9640, 7 149 641
Fakss: + 371 914 9646

Lithuania
GRUNDFOS Pumps UAB
Smolensko g. 6
LT-03201 Vilnius
Tel: + 370 52 395 430
Fax: + 370 52 395 431

Malaysia
GRUNDFOS Pumps Sdn. Bhd.
7 Jalan Peguam U1/25
Glenmarie Industrial Park
40150 Shah Alam
Selangor
Phone: +60-3-5569 2922
Telefax: +60-3-5569 2866

Mexico
Bombas GRUNDFOS de México S.A. de C.V.
Boulevard TLC No. 15
Parque Industrial Stiva Aeropuerto
Apodaca, N.L. 66600
Phone: +52-81-8144 4000
Telefax: +52-81-8144 4010

Netherlands
GRUNDFOS Netherlands
Veluwezoom 35
1326 AE Almere
Postbus 22015
1302 CA ALMERE
Tel.: +31-88-478 6336
Telefax: +31-88-478 6332
E-mail: info_gnl@grundfos.com

New Zealand
GRUNDFOS Pumps NZ Ltd.
17 Beatrice Tinsley Crescent
North Harbour Industrial Estate
Albany, Auckland
Phone: +64-9-415 3240
Telefax: +64-9-415 3250

Norway
GRUNDFOS Pumper A/S
Strømsveien 344
Postboks 235, Leirdal
N-1011 Oslo
Tlf.: +47-22 90 47 00
Telefax: +47-22 32 21 50

Poland
GRUNDFOS Pompy Sp. z o.o.
ul. Klonowa 23
Baranowo k. Poznania
PL-62-081 Przeźmierowo
Tel: (+48-61) 650 13 00
Fax: (+48-61) 650 13 50

Portugal
Bombas GRUNDFOS Portugal, S.A.
Rua Calvet de Magalhães, 241
Apartado 1079
P-2770-153 Paço de Arcos
Tel.: +351-21-440 76 00
Telefax: +351-21-440 76 90

Romania
Grundfos Pompe România SRL
S-PARK BUSINESS CENTER, Clădirea A2, etaj 2, Str. Tipografilor, Nr. 11-15, Sector 1, Cod 013714, Bucuresti, Romania,
Tel: 004 021 2004 100
E-mail: romania@grundfos.ro
www.grundfos.ro

Russia
ООО Грундфос Россия
ул. Школьная, 39-41
Москва, RU-109544, Russia
Тел. (+7) 495 564-88-00 (495) 737-30-00
Факс (+7) 495 564 8811
E-mail grundfos.moscow@grundfos.com

Serbia
Grundfos Srbija d.o.o.
Omladinskih brigada 90b
11070 Novi Beograd
Phone: +381 11 2258 740
Telefax: +381 11 2281 769
www.rs.grundfos.com

Singapore
GRUNDFOS (Singapore) Pte. Ltd.
25 Jalan Tukang
Singapore 619264
Phone: +65-6681 9688
Telefax: +65-6681 9689

Slovakia
GRUNDFOS s.r.o.
Prievozská 4D
821 09 BRATISLAVA
Phona: +421 2 5020 1426
sk.grundfos.com

Slovenia
GRUNDFOS LJUBLJANA, d.o.o.
Leskoškova 9e, 1122 Ljubljana
Phone: +386 (0) 1 568 06 10
Telefax: +386 (0)1 568 06 19
E-mail: tehnika-si@grundfos.com

South Africa
Grundfos (PTY) Ltd.
16 Lascelles Drive, Meadowbrook Estate
1609 Germiston, Johannesburg
Tel.: (+27) 10 248 6000
Fax: (+27) 10 248 6002
E-mail: lgradidge@grundfos.com

Spain
Bombas GRUNDFOS España S.A.
Camino de la Fuentecilla, s/n
E-28110 Algete (Madrid)
Tel.: +34-91-848 8800
Telefax: +34-91-628 0465

Sweden
GRUNDFOS AB
Box 333 (Lunnagårdsgatan 6)
431 24 Mölndal
Tel.: +46 31 332 23 000
Telefax: +46 31 331 94 60

Switzerland
GRUNDFOS Pumpen AG
Bruggacherstrasse 10
CH-8117 Fällanden/ZH
Tel.: +41-44-806 8111
Telefax: +41-44-806 8115

Taiwan
GRUNDFOS Pumps (Taiwan) Ltd.
7 Floor, 219 Min-Chuan Road
Taichung, Taiwan, R.O.C.
Phone: +886-4-2305 0868
Telefax: +886-4-2305 0878

Thailand
GRUNDFOS (Thailand) Ltd.
92 Chaloem Phrakiat Rama 9 Road,
Dokmai, Pravej, Bangkok 10250
Phone: +66-2-725 8999
Telefax: +66-2-725 8998

Turkey
GRUNDFOS POMPA San. ve Tic. Ltd. Sti.
Gebze Organize Sanayi Bölgesi
Ihsan dede Caddesi,
2. yol 200. Sokak No. 204
41490 Gebze/ Kocaeli
Phone: +90 - 262-679 7979
Telefax: +90 - 262-679 7905
E-mail: satis@grundfos.com

Ukraine
Бізнес Центр Європа
Столичне шосе, 103
м. Київ, 03131, Україна
Телефон: (+38 044) 237 04 00
Факс.: (+38 044) 237 04 01
E-mail: ukraine@grundfos.com

United Arab Emirates
GRUNDFOS Gulf Distribution
P.O. Box 16768
Jebel Ali Free Zone
Dubai
Phone: +971 4 8815 166
Telefax: +971 4 8815 136

United Kingdom
GRUNDFOS Pumps Ltd.
Grovebury Road
Leighton Buzzard/Beds. LU7 4TL
Phone: +44-1525-850000
Telefax: +44-1525-850011

U.S.A.
GRUNDFOS Pumps Corporation
9300 Loiret Blvd.
Lenexa, Kansas 66219
Phone: +1-913-227-3400
Telefax: +1-913-227-3500

Uzbekistan
Grundfos Tashkent, Uzbekistan The Representative Office of Grundfos Kazakhstan in Uzbekistan
38a, Oybek street, Tashkent
Телефон: (+998) 71 150 3290 / 71 150 3291
Факс: (+998) 71 150 3292

Addresses Revised 09.09.2020

Trademarks displayed in this material, including but not limited to Grundfos, the Grundfos logo and "be think innovate" are registered trademarks owned by The Grundfos Group. All rights reserved.

© 2022 Grundfos Holding A/S, all rights reserved.

96462123 08.2022

ECM: 1349366