Item # 1007-775-352 / 1007-775-625
1007-775-795 / 1007-775-807
1007-775-821 / 1007-775-837
Model # 90670 / 90671
90672 / 90673
90674 / 90675

EVERBILT™

USE AND CARE GUIDE

24 IN. X 16 IN. WHITE / GRAY / BIRCH DRAWER KIT-ADD-ON

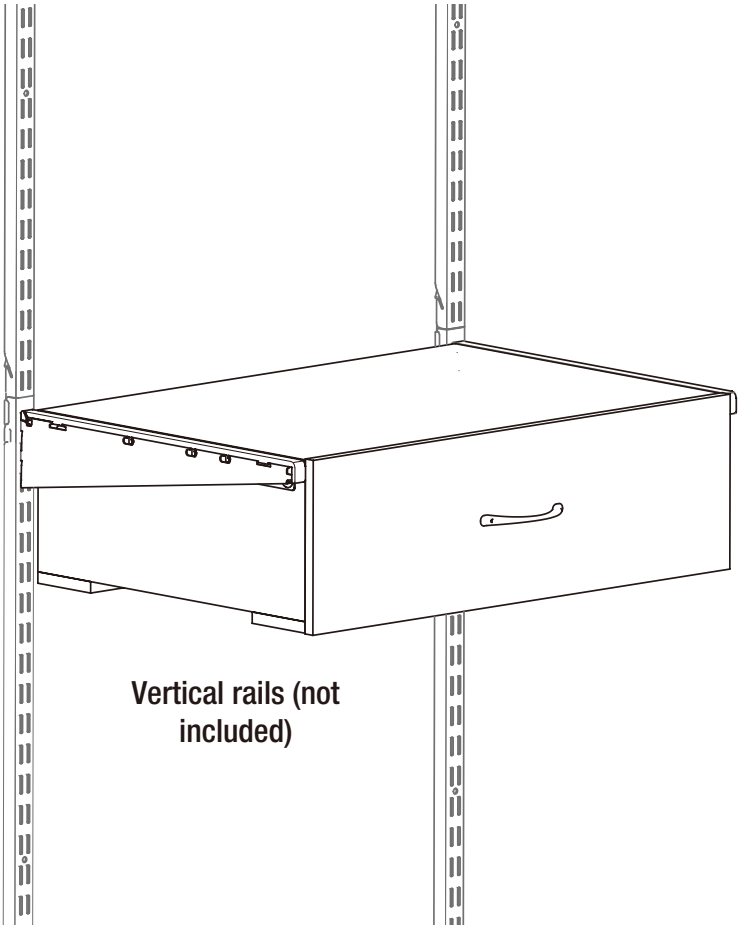

Questions, problems, missing parts? Before returning to the store,
call Everbilt Customer Service
8 a.m. – 7 p.m., EST, Monday-Friday, 9 a.m. – 6 p.m., EST, Saturday

1-800-305-1726

HOMEDEPOT.COM

THANK YOU

We appreciate the trust and confidence you have placed in Everbilt through the purchase of this drawer kit. We strive to continually create quality products designed to enhance your home. Visit us online to see our full line of products available for your home improvement needs. Thank you for choosing Everbilt!

Table of Contents

Table of Contents.....2

Safety Information.....2

Product Specifications.....2

Warranty.....2

Pre-installation.....3

Planning Installation.....3

Component Package Contents.....3

Installation 4

Install Handles.....4

Install Brackets.....4

Install Drawer Kits on The Bracket 5

Install Bracket Covers.....5

Care and Cleaning.....5

Safety Information

- ☐ Please read and strictly follow the assembly instructions for proper installation. Failure to do so may cause objects to accidentally fall, which may result in personal injury or property damage.
- ☐ Make sure to distribute the weight evenly on each unit.
- ☐ Do not overload, which may cause collapse of the system and cause personal injury or property damage.
- ☐ Do not climb, stand or step on the product, which may cause collapse of the system and cause personal injury or property damage.
- ☐ Be sure to wear appropriate safety equipment when using power tools and hand tools.
- ☐ The metal may have sharp edges or corners. The use of protective gloves is strongly recommended.
- ☐ Recommend to protect the work surface during assembly.
- ☐ This product is not a toy and contains small parts which may cause choking hazard for small children. Close supervision is necessary near children.

DANGER: The metal may have sharp edges or corners. The use of protective gloves is strongly recommended.

WARNING: Do not overload the units. This may cause collapse of the system and cause personal injury or property damage.

IMPORTANT: Please read and strictly follow the assembly instructions for proper installation.

Product Specifications

- ☐ Drywall installation requires mounting into at least 1 stud.
- ☐ Drywall requirement for claimed load : ASTM C1396 Compliant, Minimum thickness 1/2 in.
- ☐ Spacing between two vertical rails: 24 in. center-to-center.
- ☐ Installed per manufacturer's requirements.

Warranty

This product is guaranteed to be free of defects in materials and workmanship for 1 year from the date of purchase. If this product is defective, call 1-800-305-1726 or return the product to the store from which it was purchased for a replacement. Guarantee does not include normal wear and tear.

WARNING: This product can expose you to chemicals, including lead, which is known to the State of California to cause cancer and birth defects or other reproductive harm. *For more information go to www.P65Wamings.ca.gov*

Pre-installation

PLANNING INSTALLATION

1. If installing 2 or more drawer kits, install bottom drawer kit first.
2. Drawer kit is heavy. It is recommended to install the drawer kit on the brackets with two people.
3. Please remove all packaging paperboards from inside the drawer kit before installation.

COMPONENT PACKAGE CONTENTS

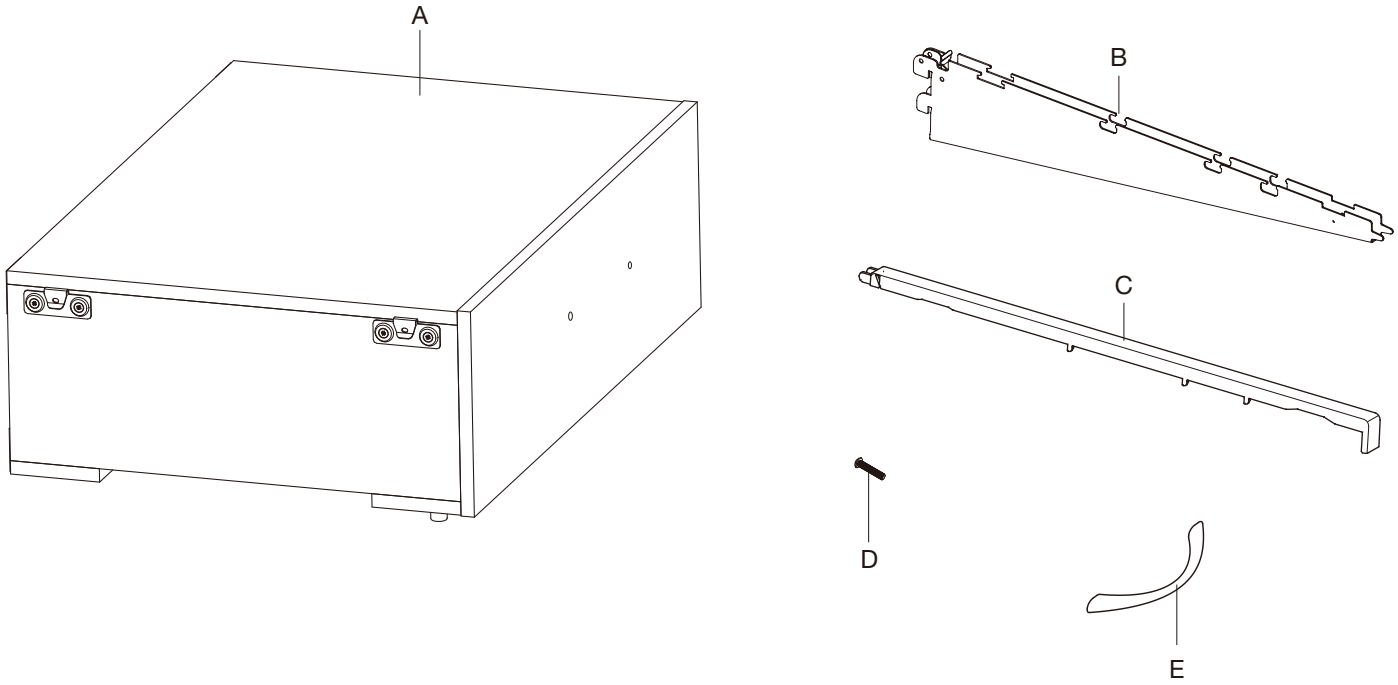

Part	Description	Quantity
A	Drawer Kit	1
B	16 in. Heavy Duty Multi Bracket	2
C	16 in. Heavy Duty Multi Bracket Cover	2
D	Handle Screw	2
E	Handle	1

Installation

1 Install Handles

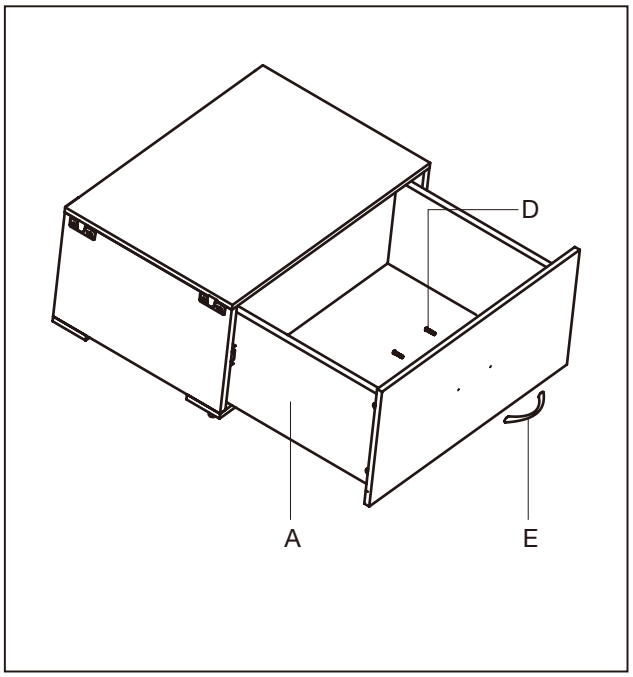

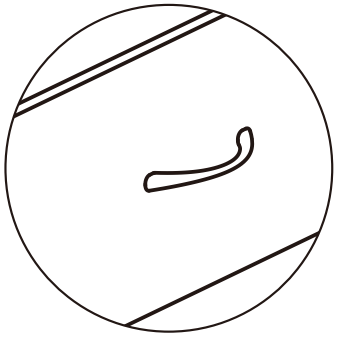

2 Install Brackets

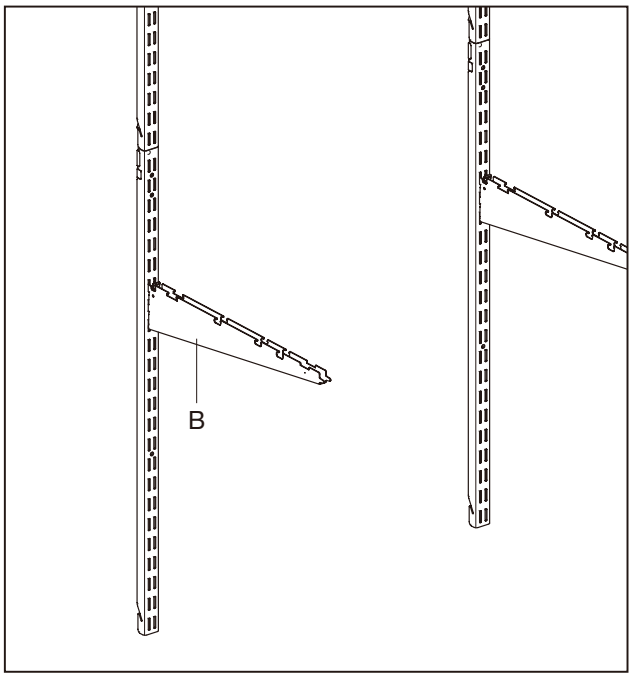

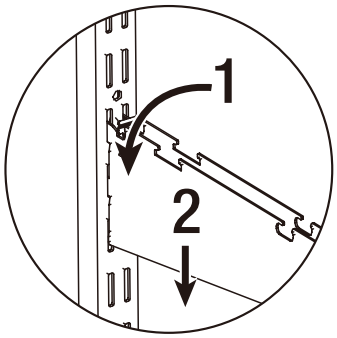

Installation (continued)

3 Install drawer kits on the bracket

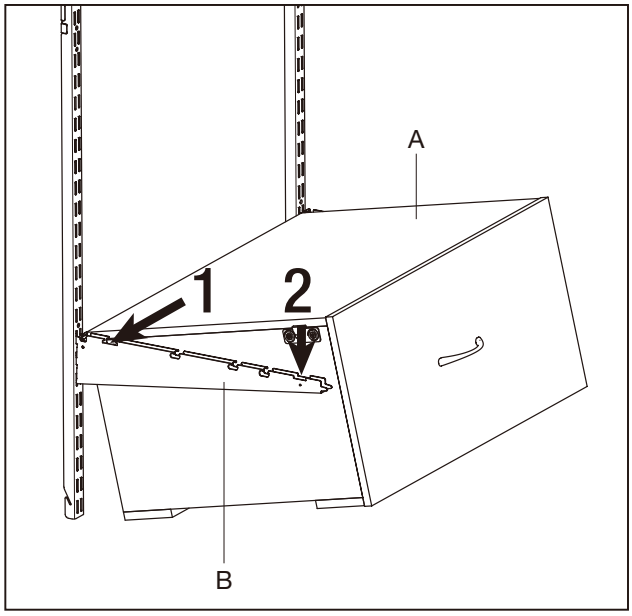

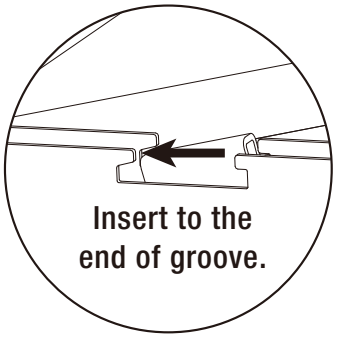

NOTE: Please remove all packaging paperboards from inside the drawer kit before installation.

4 Install bracket covers

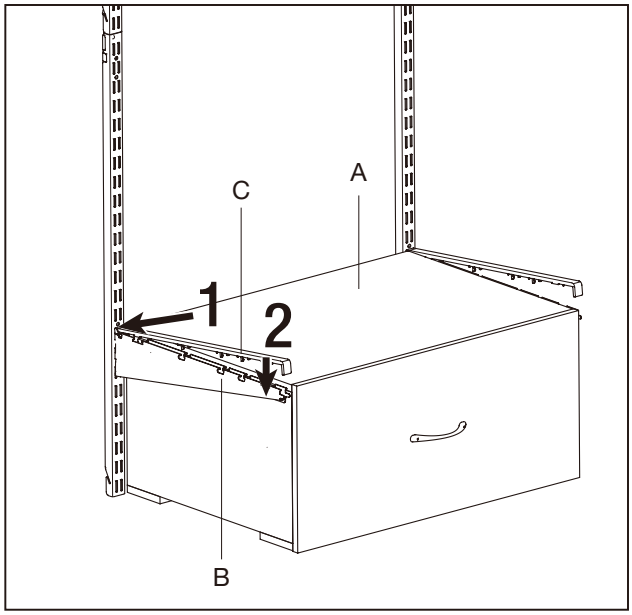

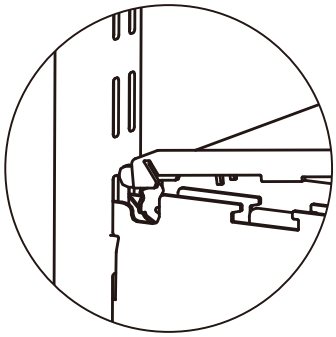

Care and Cleaning

Everbilt closet organizer is powder coated and drawer kit is made of particle board. Clean following these steps:

- ☐ To remove dust, stains, and other deposits: Use a soft cloth (or soft brush) with a diluted solution mix of warm water and a mild detergent (such as liquid dishwashing detergent). DO NOT use solvents.
- ☐ Make sure you thoroughly rinse the surface(s) with clean fresh water after cleaning to remove all residue.
- ☐ Thoroughly dry the surface(s) before reuse.

EVERBILT™

Questions, problems, missing parts? Before returning to the store,
call Everbilt Customer Service
8 a.m. – 7 p.m., EST, Monday-Friday, 9 a.m. – 6 p.m., EST, Saturday

1-800-305-1726

HOMEDEPOT.COM

Retain this manual for future use.